KGANP5201VSP

Gas Conversion Kit Natural–to–Propane for Variable Speed, Condensing and Non–Condensing Gas Furnaces

Installation Instructions

NOTE: Read the entire instruction manual before starting the installation.

SAFETY CONSIDERATION

⚠ WARNING

FIRE, EXPLOSION, ELECTRICAL SHOCK, AND CARBON MONOXIDE POISONING HAZARD

Failure to follow this warning could result in personal injury or death.

This conversion kit shall be installed by a qualified service agency in accordance with the manufacturer's instructions and all applicable codes and requirements of the authority having jurisdiction. If the information in these instructions is not followed exactly, a fire, explosion, or production of carbon monoxide could result causing property damage, personal injury, or loss of life. The qualified service agency is responsible for the proper installation of this furnace with this kit. The installation is not proper and complete until the operation of the converted appliance is checked as specified in the manufacturer's instructions supplied with the kit.

⚠ AVERTISSEMENT

LE FEU, L'EXPLOSION, CHOC ELECTRIQUE, ET MONOXYDE DE CARBONE EMPOISONNER

Cette trousse de conversion doit être installée par un servie d'entretien qualifié, selon les instructions du fabricant et selon toutes les exigences et tous les codes pertinents de l'autorité compétente. Assurezvous de bien suivre les instructions dans cette notice pour réduire au minimum le risque d'incendie, d'explosion ou la production de monoxyde de carbone pouvant causer des dommages matériels, de blessure ou la mort. Le service d'entretien qualifié est responsable de l'installation de cette trousse. L'installation n'est pas adéquate ni complète tant que le bon fonctionnement de l'appereil converti n'a pas été vérfié selon les instructions du fabricant fornies avec la trousse.

Installing and servicing heating equipment can be hazardous due to gas and electrical components. Only trained and qualified personnel should install, repair, or service heating equipment.

Untrained personnel can perform basic maintenance functions such as cleaning and replacing air filters. Trained service personnel must perform all other operations. When working on heating equipment, observe precautions in the literature, on tags, and on labels attached to or shipped with the unit, and other safety precautions that may apply.

Follow all safety codes. In the United States, follow all safety codes including the current edition of the National Fuel Gas Code (NFGC) NFPA No. 54/ANSI Z223.1. In Canada, refer to the current edition of the National Standard of Canada, Natural Gas and Propane Installation Codes (NSCNGPIC), CAN/CSA-B149.1 and .2. Wear safety glasses and work gloves. Have a fire extinguisher available during start-up, adjustment steps, and service calls.

Recognize safety information. This is the safety-alert symbol ⚠. When you see this symbol on the furnace and in instructions or manuals, be alert to the potential for personal injury. Understand the signal words DANGER, WARNING, CAUTION and NOTE. The words DANGER, WARNING, and CAUTION are used with the safety alert symbol. DANGER identifies the most serious hazards which **will** result in severe personal injury or death. WARNING signifies a hazard which **could** result in personal injury or death. CAUTION is used to identify unsafe practices which **may** result in minor personal injury or product and property damage. NOTE is used to highlight suggestions which **will** result in enhanced installation, reliability, or operation.

INTRODUCTION

⚠ WARNING

FIRE, EXPLOSION, ELECTRICAL SHOCK AND CARBON MONOXIDE POISONING HAZARD

Failure to follow instructions could result in personal injury, death or property damage.

Improper installation, adjustment, alteration, service, maintenance, or use can cause carbon monoxide poisoning, explosion, fire, electrical shock, or other conditions, which could result in personal injury or death. Consult your distributor or branch for information or assistance. The qualified installer or agency must use only factory-authorized kits or accessories when servicing this product.

⚠ WARNING

FIRE, EXPLOSION, ELECTRICAL SHOCK HAZARD

Failure to follow this warning could result in personal injury, death or property damage.

Gas supply MUST be shut off before disconnecting electrical power and proceeding with conversion.

⚠ WARNING

ELECTRICAL SHOCK, FIRE OR EXPLOSION HAZARD

Failure to follow this warning could result in personal injury, death or property damage.

Before installing, modifying, or servicing system, main electrical disconnect switch must be in the OFF position and install a lockout tag. There may be more than one disconnect switch. Lock out and tag switch with a suitable warning label. Verify proper operation after servicing.

This instruction covers the installation of gas conversion kit Part No. KGANP5201VSP to convert the following furnaces from natural gas usage to propane gas usage. See appropriate section for your furnace type.

Section 1—59MN7 & 987M 4-Way Multipoise, Hot Surface Ignition, Modulating Condensing Furnaces. This kit is designed for use in furnaces with 60,000 through 120,000 Btuh gas input rates.

Section 2—59TN6, 986T, & PG96V_T 4-Way Multipoise, Hot Surface Ignition, 2-Stage, Variable-Speed Condensing Furnaces. 59TN6A applies to 60,000 to 120,000 Btuh gas input rates. 986TA & PG96VAT applies to 40,000 to 120,000 Btuh gas input rates.

Section 3—58CVA, 58CVX, 315AAV, 315JAV, PG8MVA, & PG8JVA 33.3-In. (846 mm) High, Induced-Combustion, Hot-Surface Ignition, 2-Stage, Variable-Speed, Non-Condensing Furnaces. This kit is designed for use in furnaces with 42,000 through 154,000 Btuh gas input rates.

DESCRIPTION AND USAGE

This kit is designed for use in the furnaces listed below. See Table 1 for kit contents. To accommodate many different furnace models, more parts are shipped in kit than will be needed to complete conversion. When installation is complete, discard extra parts.

Table 1 – KGANP5201VSP Contents

COMPONENT NUMBER	QTY	DESCRIPTION
316166–329	1 PCS	CARTON
319965–445	1 PCS	LABEL, SHIPPING
320069–302	2 PCS	TAPE
323269–701	1 PCS	PARTS ASSY
323269–703	1 PCS	PARTS ASSY
323269–704	1 PCS	PARTS ASSY
323272–702	1 PCS	PARTS ASSY
323751–702	1 PCS	PARTS ASSY
337704–701	1 PCS	LABEL KIT
337704–702	1 PCS	LABEL KIT
337704–703	1 PCS	LABEL KIT
337932–701	1 PCS	BAG ASSY
337932–702	1 PCS	BAG ASSY
337932–703	1 PCS	BAG ASSY
AG–KGANPVSP–XX	1 PCS	INSTRUCTIONS
EF39ZW002	1 PCS	VALVE CVRSN KIT
EF39ZW023	2 PCS	VALVE CVRSN KIT
HK02LB008	1 PCS	SWITCH, PRESSURE
W182X06––04––012	1 PCS	WIRE ASSY
W182X23––04––018	2 PCS	WIRE ASSY
W182X66––04––012	1 PCS	WIRE ASSY
W182X66––04––018	1 PCS	WIRE ASSY
W182Y66––11––006	1 PCS	WIRE ASSY
W182Y66––11––014	1 PCS	WIRE ASSY
W182Y66––23––016	1 PCS	WIRE ASSY

SECTION 1

Table 2 – Condensing Furnaces

MODEL NUMBERS BEGINNING WITH:	
59MN7	987M

INSTALLATION

1. Set room thermostat to lowest setting or “OFF”.
2. Remove outer doors.
3. Disconnect power at external disconnect, fuse or circuit breaker.
4. Turn off gas at external shut-off or gas meter.
5. Remove outer doors and set aside.
6. Turn electric switch on gas valve to OFF.

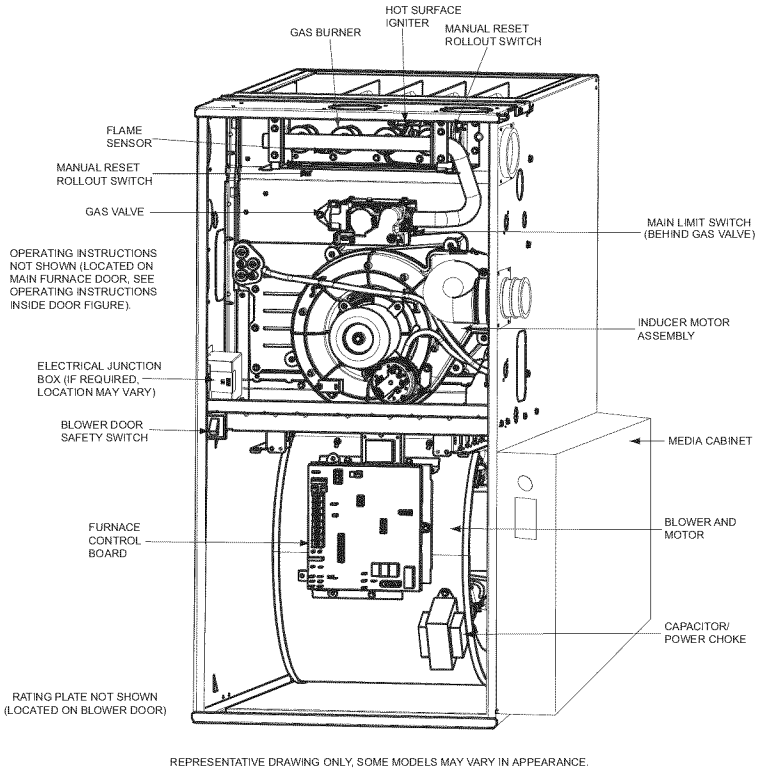

Fig. 1 - Component Location

MANIFOLD/ORIFICE/BURNER REMOVAL

⚠ CAUTION

UNIT OPERATION HAZARD

Failure to follow this caution may result in unit damage or improper operation.

Label all wires prior to disconnection when servicing controls.

⚠ PRUDENCE

D'EQUIPEMENT D'OPERATION

Toute erreur de câblage peut être une source de danger et de panne.

Lors des opérations d'entretien des commandes, étiqueter tous les fils avant de les déconnecter.

NOTE: Use a back-up wrench on the gas valve to prevent the valve from rotating on the manifold or damaging the mounting to the burner box.

1. Disconnect the gas pipe from gas valve and remove pipe from the furnace casing.
2. Disconnect the connector harness from gas valve. Disconnect wires from Hot Surface Igniter (HSI) and Flame Sensor.
3. Support the manifold and remove the 4 screws that secure the manifold assembly to the burner box and set aside.
4. Note the location of the green/yellow wire ground wire for re-assembly later.
5. Slide one-piece burner assembly out of slots on sides of burner box.
6. Remove the flame sensor from the burner assembly.
7. Remove the orifices from the manifold and discard.

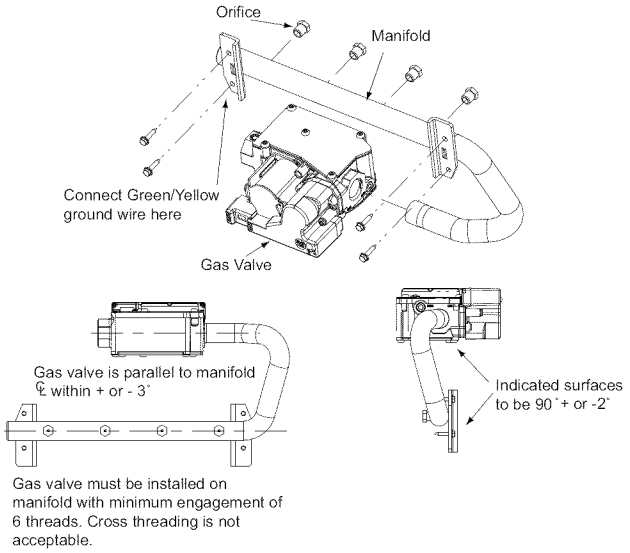

Fig. 2 - Modulating Gas Valve with Orifices

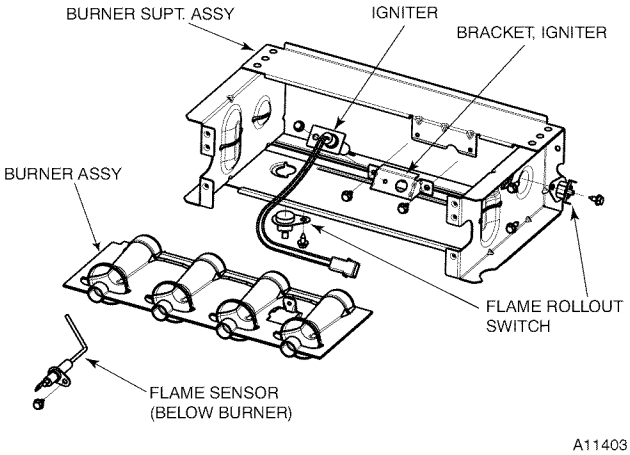

Fig. 3 - Burner Assembly

ORIFICE SELECTION/DERATE

⚠ CAUTION

UNIT DAMAGE HAZARD

Failure to follow this caution may result in unit damage.

DO NOT re-drill burner orifices. Improper drilling may result in burrs, out-of-round holes, etc. Obtain new orifices if orifice size must be changed. (See Fig. 4.)

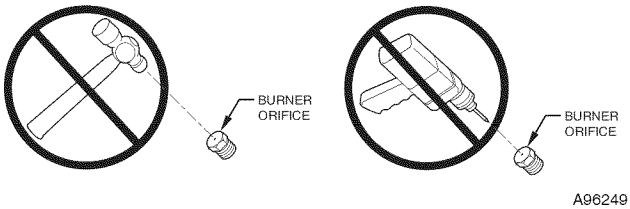

Fig. 4 - Burner Orifice

Refer to conversion kit rating plate 337704-201 to determine main burner orifice size. (See Fig. 5.)

Furnace gas input rate on furnace rating plate is for installations at altitudes up to 2000 ft.

In the U.S.A.; the input rating for altitudes above 2000 ft. must be reduced by 2 percent for each 1000 ft. above sea level.

In Canada, the input rating must be derated by 5 percent for altitudes of 2000 ft. to 4500 ft. above sea level.

The Conversion Kit Rating Plate accounts for high altitude derate.

INSTALL ORIFICES

Install main burner orifices. Do not use Teflon tape. Finger-tighten orifices at least one full turn to prevent cross-threading, then tighten with wrench. There are enough orifices in each kit for largest furnace. Discard extra orifices.

NOTE: DO NOT reinstall the manifold at this time.

INSTALL MIXER SCREWS

NOTE: There are 2 sets of mixer screws. One set is for Condensing gas furnaces, the other set is for Non-condensing gas furnaces. Use only the parts in the bag marked **"REQUIRED FOR THE CONVERSION OF CONDENSING GAS FURNACES TO PROPANE GAS"**

See Fig. 6 to verify you have the correct set of mixer screws.

1. Locate the dimple on each burner venturi tube. If you cannot locate the dimple, refer to Fig. 7 for location of the mixer screw.
2. Drill a 7/64-in. (2.8 mm) hole (supplied in kit) in each dimple.
3. Install a mixer screw in each drilled hole drilling as straight as possible. The screw head should be flush with the top of the burner venturi.

CONVERSION KIT RATING PLATE - CARRIER CORP.

THIS APPLIANCE HAS BEEN CONVERTED TO USE PROPANE GAS FOR FUEL. REFER TO KIT INSTRUCTIONS FOR CONVERSION PROCEDURES. USE PARTS SUPPLIED BY CARRIER CORPORATION AND INSTALLED BY QUALIFIED PERSONNEL. SEE EXISTING RATING PLATE FOR APPLIANCE MODEL NO. AND INPUT RATING.

NOTE: Furnace gas input rate on rating plate is for installations up to 2000 ft. (610m) above sea level. In U.S.A. the input rating for altitudes above 2000 ft. (610m) must be derated by 2% for each 1000 ft. (305m) above sea level. In Canada the input rating must be derated by 5% for altitudes of 2000 ft. (610m) to 4500 ft. (1372m) above sea level.

KIT NO.: KGANP5201VSP FUEL USED: PROPANE GAS INLET PRESSURE (min - max): 11.0 - 13.6 in. wc

APPLIANCE MODELS		ALTITUDE OF INSTALLATION (FT. ABOVE SEA LEVEL) U.S.A. *								
		0 to 2000	2001 * to 3000	3001 to 4000	4001 to 5000	5001 to 6000	6001 to 7000	7001 to 8000	8001 to 9000	9001 to 10000
59MN7A 987MA	Orifice No.	1.25mm	1.25mm	1.25mm	1.25mm	1.25mm	1.25mm	1.25mm	1.25mm	1.25mm
		Manifold Pressure								
	MAX	11.0	11.0	11.0	11.0	11.0	11.0	11.0	11.0	11.0
	INT	5.8	5.5	5.5	5.5	5.4	5.4	5.4	5.3	5.3
	MIN	2.2	2.1	2.1	2.1	2.1	2.0	2.0	2.0	2.0

* For Canadian Installations from 2000 to 4500 ft. (610m to 1373m) use U.S.A. column 2001 to 3000 ft. (611m to 914m).

337704-201 REV. B

A11295

Fig. 5 - Conversion Kit Rating Plate 337704-201

337932-701

PART #	CONTAINS: DESCRIPTION	QTY
328456-402	BIT, DRILL	1
FAJ5812B	SCREW	7

REQUIRED FOR CONVERSION OF CONDENSING GAS FURNACE TO PROPANE GAS.

A11294

Fig. 6 - Gas Conversion Kit

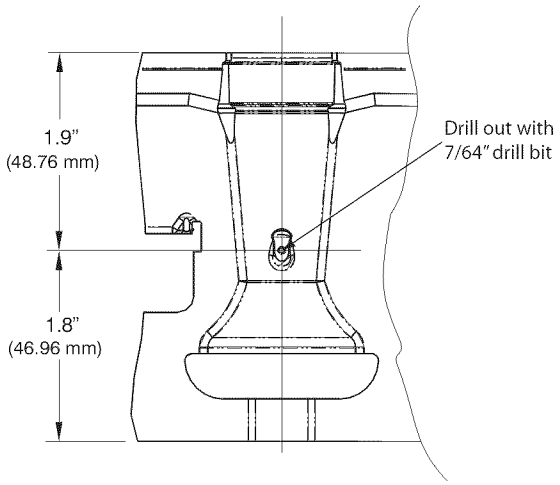

A11460

Fig. 7 - Mixer Screw Location

REINSTALL BURNER ASSEMBLY

To reinstall burner assembly:

1. Attach flame sensor to burner assembly.
2. Insert one-piece burner in slot on sides of burner box and slide burner back in place.
3. Reattach HSI wires to HSI.
4. Verify igniter to burner alignment. See Fig. 8 and 9.

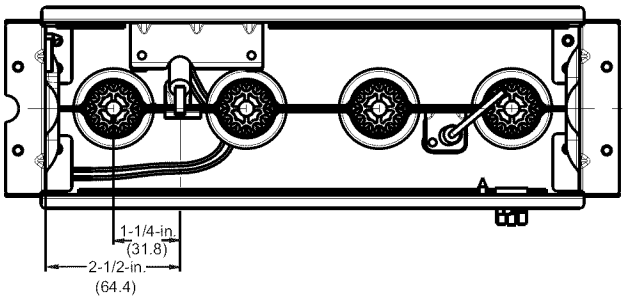

A11405

Fig. 8 - Igniter Position - Top View

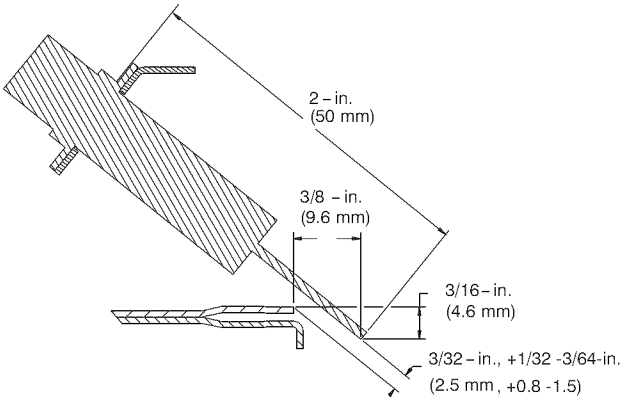

A12392

Fig. 9 - Igniter Position - Side View

CONVERT GAS VALVE

⚠ WARNING

FIRE, EXPLOSION, ELECTRICAL SHOCK HAZARD

Failure to follow this warning could result in personal injury, death or property damage.

Gas supply MUST be shut off before disconnecting electrical power and proceeding with conversion.

⚠ WARNING

ELECTRICAL SHOCK, FIRE OR EXPLOSION HAZARD

Failure to follow this warning could result in personal injury, death or property damage.

Before installing, modifying, or servicing system, main electrical disconnect switch must be in the OFF position and install a lockout tag. There may be more than one disconnect switch. Lock out and tag switch with a suitable warning label. Verify proper operation after servicing.

Refer to Fig. 10 and 11.

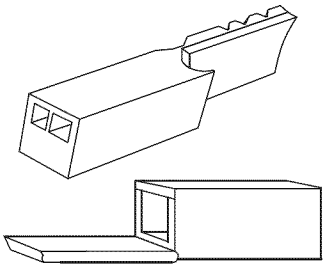

A11373

Fig. 10 - Propane Jumper

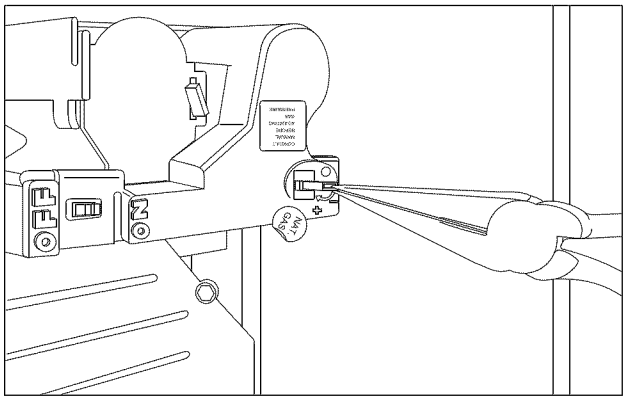

A11375

Fig. 11 - Installing Propane Jumper

NOTE: The Propane jumper for the modulating gas valve is very small. Needle-nose pliers are required to insert the jumper into the valve. If the jumper is not installed, the valve will not operate properly on propane.

1. Locate the round **"NAT. GAS"** sticker on the top of the gas valve.
2. Peel the sticker off and discard.
3. Note the small square opening in the top of the gas valve.
4. Note the 2 jumper pins inside the modulating gas valve.
5. Remove the small black plastic propane jumper from the envelope.
6. Use needle-nosed pliers to hold the jumper by the tab on the end.
7. Insert the jumper on the pins inside the gas valve.
8. Cover the opening in the gas valve with the label marked **"LP GAS"**

INSTALL LOW GAS PRESSURE SWITCH

NOTE: Install the Low Gas Pressure Switch before installing the manifold on the burner assembly.

There are 2 ways to mount the Low Gas Pressure Switch.

All 14 3/16-in. (360 mm) Casings or Vent Passes Between Inducer Assembly and Burner Assembly

If the vent pipe passes between the inducer and burner assembly, or the furnace is a 14 3/16-in. (360 mm) wide casing, install the switch as follows (See Fig 12):

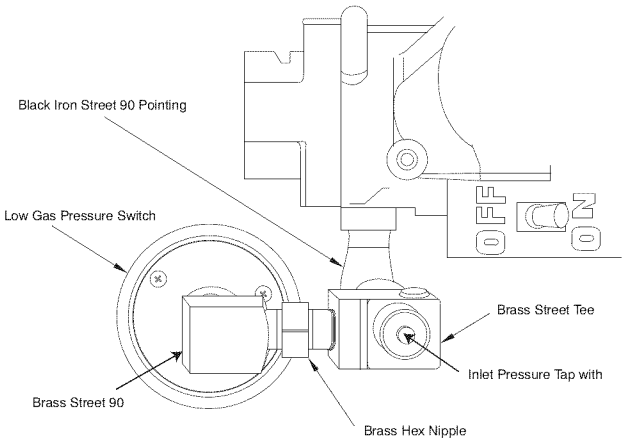

A11367

Fig. 12 - LGPS for 14-3/16 (360 mm) Casing or When Vent Passes Between Inducer and Burner Assembly

1. Remove the 1/8-in. NPT pipe plug from the gas valve inlet pressure tap.

NOTE: Use pipe dope approved for use with Propane Gas.

NOTE: Tighten all fittings and the Low Gas Pressure Switch with a small wrench. Do not over-tighten, check for gas leaks after gas supply has been turned on.

⚠ WARNING

FIRE AND EXPLOSION HAZARD

Failure to follow this warning could result in personal injury and/or death.

NEVER test for gas leaks with an open flame. Use a commercially available soap solution made specifically for the detection of leaks to check all connections. A fire or explosion may result causing property damage, personal injury or loss of life.

2. Apply pipe dope sparingly to the male threads of the 1/8-in. black iron street elbow. Install the street elbow into the gas valve inlet pressure tap. Point the open end of the street elbow toward you.
3. Apply pipe dope sparingly to the male threads of the 1/8-in. brass street tee. Install the male end of the street tee as shown in Fig 12. One opening on the street tee should face you. The other opening should be parallel with the inlet of the gas valve.
4. Apply pipe dope sparingly to the male threads of the 1/8-in. brass hex nipple. Install the hex nipple into the open end of the brass street tee. See Fig 12. The hex nipple should be parallel with the boss on the gas valve.
5. Install the open end of the brass street elbow on the end of the hex nipple. Tighten the street elbow so the male threads of the elbow point away from you.
6. Apply pipe dope sparingly to the male threads of the 1/8-in. brass street elbow. Install the Low Gas Pressure Switch on the male threads of the street elbow. Tighten switch at hex fitting at base of switch. Do not use switch body to tighten switch. Do not over-tighten switch.
7. The remaining opening on the brass street tee is the new gas valve inlet pressure tap. Install manometer fitting to the open end of the brass street tee. Or if installation is to be completed later, apply pipe dope to inlet pressure plug from gas valve and install in open end of brass street tee.
8. Check all fittings for leaks after gas supply has been turned on.

Casings Wider Than 14 3/16-in. (360 mm) / Vent Does Not Pass Between Inducer and Burner Assembly

1. If the vent pipe does not pass between the inducer and burner assembly, or the furnace is wider than a 14 3/16-in. (360 mm) wide casing, install the switch as follows (See Fig 13):
2. Remove the 1/8-in. NPT pipe plug from the gas valve inlet pressure tap.

NOTE: Use pipe dope approved for use with Propane Gas.

For larger casing when Vent Pipe does not pass across casing. All Sizes switch contacts must point toward the Cell Panel. Black Iron Street 90 can be used at Valve Inlet instead of Brass Street 90.

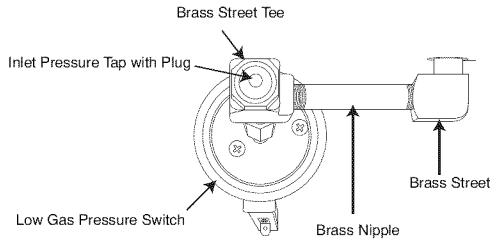

A11366

Fig. 13 - LGPS for Casing Wider Than 14-3/16 (360 mm) and Vent Does Not Pass Between Inducer and Burner Assembly

INSTALL LOW GAS PRESSURE SWITCH WIRES

1. Locate the orange wire in the kit with an insulated straight female spade terminal and an insulated straight male terminal on the other end.
2. Connect the female terminal to a terminal on the Low Gas Pressure Switch.
3. Locate the orange wire in kit with an insulated straight female spade terminal and an insulated female flag terminal on the other end.
4. Connect both straight female terminals of the orange wires to the terminals on the Low Gas Pressure Switch.

INSTALL MANIFOLD

1. Align the orifices in the manifold assembly with the support rings on the end of the burner.
2. Insert the orifices in the support rings of the burners. Manifold mounting tabs should fit flush against the burner box

NOTE: If manifold does not fit flush against the burner box, the burners are not fully seated forward. Remove the manifold and check burner positioning in the burner box assembly.

3. Attach the green/yellow wire and ground terminal to one of the manifold mounting screws.
4. Install the remaining manifold mounting screws.
5. Connect the wires to the flame sensor and hot surface igniter.
6. Connect the connector harness to gas valve

NOTE: Use only propane-resistant pipe dope. Do not use Teflon tape.

7. Insert the gas pipe through the grommet in the casing. Apply a thin layer of pipe dope to the threads of the pipe and thread the pipe into the gas valve.

NOTE: Use a back-up wrench on the gas valve to prevent the valve from rotating on the manifold or damaging the mounting to the burner box.

8. With a back-up wrench on the inlet boss of the gas valve, finish tightening the gas pipe to the gas valve.
9. Turn gas on at electric switch on gas valve.

MODIFY PRESSURE SWITCH WIRING

⚠ CAUTION

UNIT OPERATION HAZARD

Failure to follow this caution may result in unit damage or improper operation.

Label all wires prior to disconnection when servicing controls.

⚠ PRUDENCE

D'EQUIPEMENT D'OPERATION

Toute erreur de câblage peut être une source de danger et de panne.
Lors des opérations d'entretien des commandes, étiqueter tous les fils avant de les déconnecter.

1. Disconnect orange wire from Low Pressure switch LPS on inducer housing.
2. Connect the orange wire from the Low Pressure Switch to the orange wire with the insulated male spade terminal.
3. Connect the orange wire from the Low Gas Pressure Switch to the terminal on the Low Pressure Switch.
4. Route orange wires along wire harness. If possible, secure with wire tie provided in kit.

CHECK INLET GAS PRESSURE

⚠ CAUTION

UNIT DAMAGE HAZARD

Failure to follow this caution may result in unit damage.

DO NOT operate furnace more than one minute to check inlet gas pressure, as conversion is not complete at this time.

NOTE: This kit is to be used only when inlet gas pressure is between 11.0-in. W.C. and 13.6-in. W.C.

1. Verify manometer is connected to inlet pressure tap on gas valve.
2. Turn on furnace power supply.
3. Turn gas supply manual shutoff valve to ON position.

⚠ WARNING

FIRE, EXPLOSION, ELECTRICAL SHOCK HAZARD

Failure to follow this warning could result in personal injury, death or property damage.

Gas supply MUST be shut off before disconnecting electrical power and proceeding with conversion.

⚠ WARNING

ELECTRICAL SHOCK, FIRE OR EXPLOSION HAZARD

Failure to follow this warning could result in personal injury, death or property damage.

Before installing, modifying, or servicing system, main electrical disconnect switch must be in the OFF position and install a lockout tag. There may be more than one disconnect switch. Lock out and tag switch with a suitable warning label. Verify proper operation after servicing.

4. Turn furnace gas valve switch to ON position.
5. Turn Setup Switch SW1-2 on furnace control ON (see Fig. 14).
6. Jumper R-W/W1 and R-W2 thermostat connections on control.

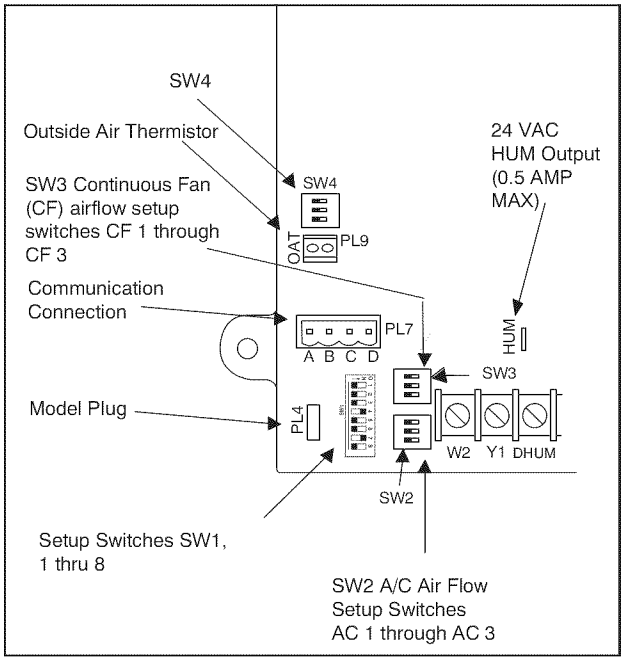

A11471

Fig. 14 - Furnace Control

7. When main burners ignite, confirm inlet gas pressure is between 11.0-in. W.C. and 13.6-in. W.C.
8. Remove jumper across R-W/W1 and R-W2 thermostat connections to terminate call for heat.
9. Turn furnace gas valve switch to OFF position.
10. Turn gas supply manual shutoff valve to OFF position.
11. Turn off furnace power supply.
12. Remove manometer.
13. Apply pipe dope sparingly to end of inlet gas pipe plug and install into unused end of 1/8 in. tee. Use a small back-up wrench on tee when tightening gas inlet pipe plug. (See Fig. 13.)

CHECK FURNACE AND MAKE ADJUSTMENTS

⚠ WARNING

FIRE AND EXPLOSION HAZARD

Failure to follow this warning could result in personal injury and/or death.

NEVER test for gas leaks with an open flame. Use a commercially available soap solution made specifically for the detection of leaks to check all connections. A fire or explosion may result causing property damage, personal injury or loss of life.

⚠ AVERTISSEMENT

RISQUE D'EXPLOSION ET D'INCENDIE

Le fait de ne pas suivre cet avertissement pourrait entraîner des dommages corporels et / ou la mort.

Ne jamais examiner pour les fuites de gaz avec une flamme vive. Utilisez plutôt un savon fait specifiquement pour la détection des fuites de gaz pour verifier tous les connections. Un incendie ou une explosion peut entrainer des dommages matériels, des blessures ou la mort.

1. Be sure main gas and electric supplies to furnace are off.
2. Remove 1/8-in. (3 mm) pipe plug from manifold pressure tap on downstream side of gas valve.
3. Attach manometer to manifold pressure tap on gas valve. (see Fig. 15.)
4. Turn gas supply manual shutoff valve to ON position.
5. Turn furnace gas valve switch to ON position.
6. Check all threaded pipe connections for gas leaks.
7. Turn on furnace power supply.

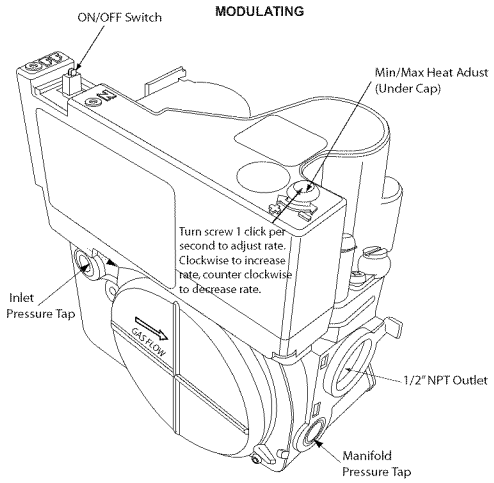

A10496

Fig. 15 - Gas Valve

GAS INPUT RATE INFORMATION

The gas input rate for propane is the same as for natural gas. See furnace rating plate on blower door for input rate. The input rate for propane is determined by manifold pressure and orifice size.

The gas valve must be set for Maximum Heat first and then set for Minimum heat on Modulating furnaces. Furnace gas input rate on rating plate is for installations at altitudes up to 2000 ft. (610 M).

In the U.S.A., the input rating for altitudes above 2000 ft. (610M) must be reduced by 2 percent for each 1000 ft. (305 M) above sea level.

In Canada, the input rating must be derated by 5 percent for altitudes of 2000 ft. (610 M) to 4500 ft. (1372 M) above sea level.

The Conversion Kit Rating Plate accounts for high altitude derate.

SET GAS INPUT RATE

⚠ CAUTION

UNIT DAMAGE HAZARD

Failure to follow this caution may result in gas valve damage.

Do not force the rotary adjustment switch on the modulating gas valve. Do not turn the rotary adjustment switch faster than one click per second when adjusting manifold pressure. Gas valve will be damaged if excessive force is used on the rotary switch.

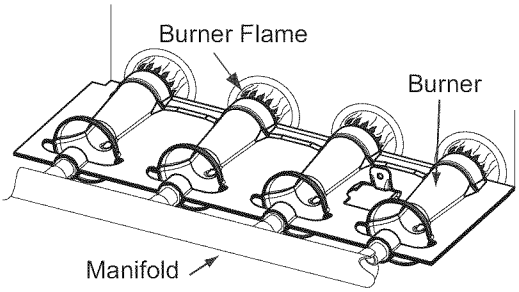

Fig. 16 - Burner Flame

For proper operation and long term reliability, the manifold pressure must be adjusted as specified on the conversion kit rating plate.

The modulating furnace manifold pressure is set at two points. The first point is Maximum Heat. The second point is Minimum Heat. Do not adjust Intermediate Heat manifold pressure. Intermediate Heat manifold pressure can be checked as part of the temperature rise, but is not adjustable. Always adjust Maximum Heat first, then Minimum Heat.

NOTE: DO NOT set Maximum Heat manifold pressure less than 10.5-in. W.C. or more than 11-in. W.C. for propane gas.

NOTE: Use care when performing adjustments. Gas valve adjustment is performed by turning a rotary adjustment switch inside the gas valve with a small straight blade screwdriver. Excessive force can break or bend the rotary adjustment switch making it non-adjustable.

To adjust manifold pressure to obtain input rate for Maximum Heat:

1. Make sure the gas supply is turned off to the furnace and at the electric switch on the gas valve.
2. Remove the 1/8 inch NPT plug from the outlet pressure tap on the gas valve.
3. Connect a manometer to the outlet pressure tap on gas valve.
4. Turn on furnace power supply.
5. Turn gas supply manual shutoff valve to ON position.
6. Turn furnace gas valve switch to ON position.
7. Turn Setup switch SW 1-2 to ON.
8. Verify Set-up switch SW 4-2 is turned OFF.
9. Jumper the R to W/W1 and W2 thermostat connections at the furnace control board.
10. After the main burners ignite and the blower starts, confirm Maximum Heat manifold pressure is correct, based on the manifold pressure table on the Conversion Kit Rating Plate.
11. To adjust the Maximum Heat manifold pressure, Slowly turn the rotary adjustment switch counterclockwise to decrease manifold pressure or clockwise to increase manifold pressure.
12. Turn rotary adjustment switch no more than one click per second until you obtain the required manifold pressure.

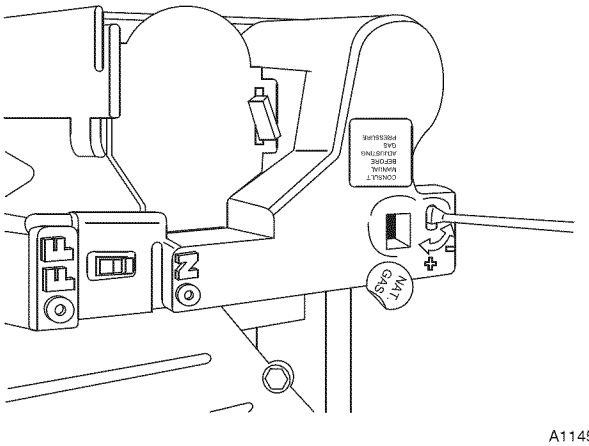

Fig. 17 - Modulating Gas Valve Adjustment

Main burner flame should be clear blue, almost transparent.

To adjust manifold pressure to obtain input rate for Minimum Heat:

1. Remove the jumper from W2 at the thermostat connections at the furnace control board control.
2. Wait until the burners and the blower transitions to Minimum Heat.
3. Verify the Minimum Heat manifold pressure is correct, based on the manifold pressure table on Conversion Kit Rating Plate.
4. To adjust the Minimum Heat manifold pressure, Slowly turn the rotary adjustment switch counterclockwise to decrease manifold pressure or clockwise to increase manifold pressure.
5. Turn rotary adjustment switch no more than one click per second until you obtain the required manifold pressure. This adjustment will not affect the previous Maximum Heat adjustment.

After adjusting the manifold pressure, allow the furnace to operate an additional 5 minutes before checking Minimum Heat Temperature rise.

Furnace must operate within ranges of temperature rise specified on the furnace rating plate. Determine air temperature rise as follows:

1. Place thermometers in return and supply ducts as near furnace as possible. Be sure thermometers do not see heat exchanger so that radiant heat does not affect readings. This practice is particularly important with straight-run ducts.
2. When thermometer readings stabilize, subtract return-air temperature from supply-air temperature to determine air temperature rise.
3. Allow the furnace to run for at least 10 minutes before checking Temperature Rise.

If the temperature rise is too high or too low in Minimum Heat:

1. Remove jumpers from R and W/W1.
2. Wait until the blower off delay is completed.
3. Turn 115 VAC power off.
4. Check the position of Heat Rise Adjustment Switch SW1-3. When set to ON, airflow is raised 18% higher for Minimum Heat and Intermediate Heat. Factory default position is OFF.
5. Turn 115 VAC power on.
6. Jumper R to W/W1 and W2.

7. After burners ignite and blower starts allow the furnace to run for at least 10 minutes before checking Temperature Rise.

Maximum Heat Temperature Rise

If the temperature rise is too high or too low in Maximum Heat:

1. Remove jumpers from R, W1 and W2.
2. Wait until the blower off delay is completed.
3. Turn 115 VAC power off.
4. Check the position of the Efficiency/Comfort Adjustment switch SW1-4. When set to OFF (Efficiency Mode), airflow is 10% higher for Minimum, 7.5% for Intermediate Heat, and 17.5% for Maximum Heat. Factory default position is ON (Comfort Mode).
5. Turn 115 VAC power on.
6. Re-check Minimum Heat Temperature Rise.
7. Remove jumpers across thermostat connections to terminate the call for heat. Wait until the blower off delay is completed.
8. Turn gas supply manual shutoff valve to OFF position.
9. Turn off furnace power supply.
10. Remove manometer from the outlet pressure tap of the gas valve.
11. Apply pipe dope sparingly to 1/8-in. NPT plug and re-install outlet pressure tap on the gas valve.
12. Re-install plastic cap over rotary adjustment switch on the top of the gas valve.

CHECK LOW GAS PRESSURE SWITCH

The newly installed low gas pressure switch is a safety device used to guard against adverse burner operating characteristics that can result from low gas supply pressure. Switch opens at not less than 6.5 in. W.C. and closes at not greater than 10.2 in. W.C.

This switch also prevents operation when the propane tank level is low which can result in gas with a high concentration of impurities, additives, and residues that have settled to the bottom of the tank. Operation under these conditions can cause harm to the heat exchanger system. This normally open switch closes when gas is supplied to gas valve under normal operating pressure. The closed switch completes control circuit. Should an interruption or reduction in gas supply occur, the gas pressure at switch drops below low gas pressure switch setting, and switch opens. Any interruption in control circuit (in which low gas pressure switch is wired) quickly closes gas valve and stops gas flow to burners. When normal gas pressure is restored, the system must be electrically reset to re-establish normal heating operation.

Before leaving installation, observe unit operation through 2 complete heating cycles. During this time, turn gas supply to gas valve off just long enough to completely extinguish burner flame, then instantly restore full gas supply. To ensure proper low gas pressure switch operation, observe that there is no gas supply to burners until after hot surface igniter begins glowing.

LABEL APPLICATION

1. Fill in Conversion Responsibility Label 337704-205 and apply to Blower Access Door of furnace as shown. (See Fig. 18. Date, name, and address of organization making this conversion are required.
2. Attach Conversion Rating Plate Label 337704-201 to outer door of furnace., see Fig. 5.
3. Attach Gas Control Conversion Label 337704-202 to gas valve. Do not use 337704-203, which is similar.

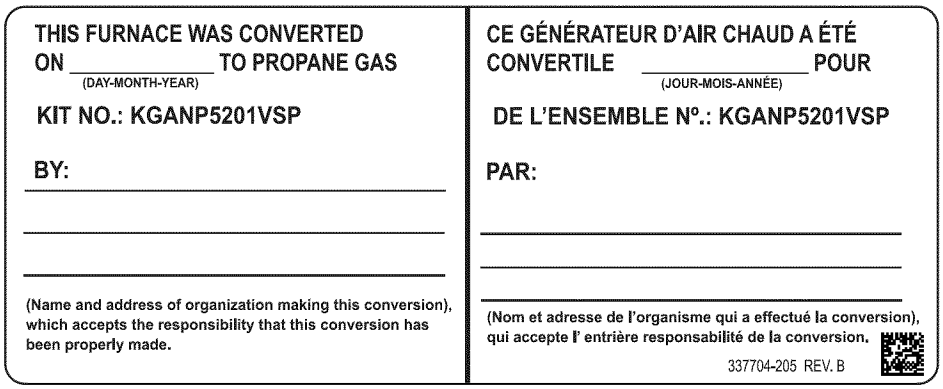

A11296

Fig. 18 - Conversion Responsibility Label

SECTION 2

Table 3 – Variable Speed Condensing Furnaces

MODEL NUMBERS BEGINNING WITH:	
59TN6	986T
PG96V_T	

INSTALLATION

⚠ WARNING

FIRE, EXPLOSION, ELECTRICAL SHOCK AND CARBON MONOXIDE POISONING HAZARD

Failure to follow instructions could result in personal injury, death or property damage.

Improper installation, adjustment, alteration, service, maintenance, or use can cause carbon monoxide poisoning, explosion, fire, electrical shock, or other conditions, which could result in personal injury or death. Consult your distributor or branch for information or assistance. The qualified installer or agency must use only factory-authorized kits or accessories when servicing this product.

⚠ WARNING

FIRE, EXPLOSION, ELECTRICAL SHOCK, AND CARBON MONOXIDE POISONING HAZARD

Failure to follow this warning could result in personal injury or death.

This conversion kit shall be installed by a qualified service agency in accordance with the manufacturer's instructions and all applicable codes and requirements of the authority having jurisdiction. If the information in these instructions is not followed exactly, a fire, explosion, or production of carbon monoxide could result causing property damage, personal injury, or loss of life. The qualified service agency is responsible for the proper installation of this furnace with this kit. The installation is not proper and complete until the operation of the converted appliance is checked as specified in the manufacturer's instructions supplied with the kit.

⚠ AVERTISSEMENT

LE FEU, L'EXPLOSION, CHOC ELECTRIQUE, ET MONOXYDE DE CARBONE EMPOISONNER

Cette trousse de conversion doit être installée par un servie d'entretien qualifié, selon les instructions du fabricant et selon toutes les exigences et tous les codes pertinents de l'autorité compétente. Assurezvous de bien suivre les instructions dans cette notice pour réduire au minimum le risque d'incendie, d'explosion ou la production de monoxyde de carbone pouvant causer des dommages matériels, de blessure ou la mort. Le service d'entretien qualifié est responsable de l'installation de cette trousse. L'installation n'est pas adéquate ni complète tant que le bon fonctionnement de l'appereil converti n'a pas été vérfié selon les instructions du fabricant fornies avec la trousse.

⚠ WARNING

FIRE, EXPLOSION, ELECTRICAL SHOCK HAZARD

Failure to follow this warning could result in personal injury, death or property damage.

Gas supply MUST be shut off before disconnecting electrical power and proceeding with conversion.

⚠ WARNING

ELECTRICAL SHOCK, FIRE OR EXPLOSION HAZARD

Failure to follow this warning could result in personal injury, death or property damage.

Before installing, modifying, or servicing system, main electrical disconnect switch must be in the OFF position and install a lockout tag. There may be more than one disconnect switch. Lock out and tag switch with a suitable warning label. Verify proper operation after servicing.

1. Set room thermostat to lowest setting or "OFF".
2. Remove outer doors.
3. Disconnect power at external disconnect, fuse or circuit breaker.
4. Turn off gas at external shut-off or gas meter.
5. Remove outer doors and set aside.
6. Turn electric switch on gas valve to OFF.

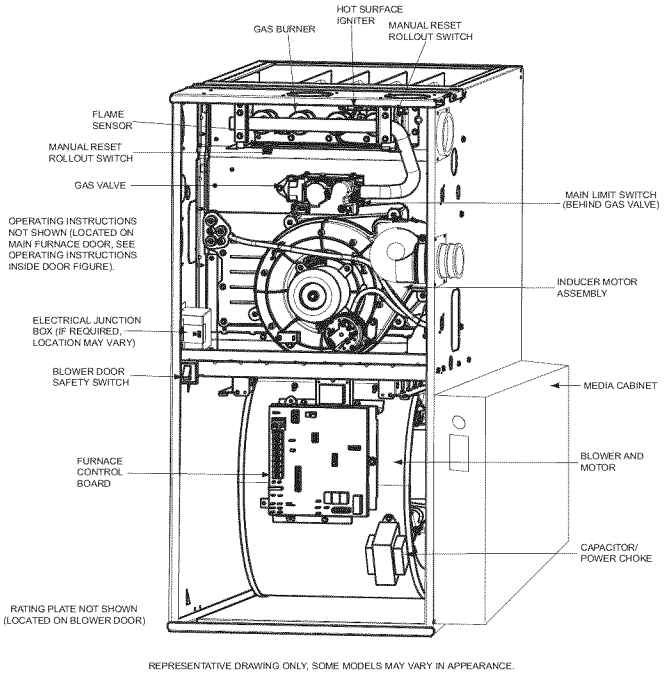

A11408

Fig. 19 - Component Location

MANIFOLD/ORIFICE/BURNER REMOVAL

⚠ CAUTION

UNIT OPERATION HAZARD

Failure to follow this caution may result in unit damage or improper operation.

Label all wires prior to disconnection when servicing controls.

⚠ PRUDENCE

D'EQUIPMENT D'OPERATION

Lors des opérations d'entretien des commandes, étiqueter tous les fils avant de les déconnecter.

NOTE: Use a back-up wrench on the gas valve to prevent the valve from rotating on the manifold or damaging the mounting to the burner box.

1. Disconnect the gas pipe from gas valve and remove pipe from the furnace casing.
2. Disconnect the connector harness from gas valve. Disconnect wires from Hot Surface Igniter (HSI) and Flame Sensor.
3. Support the manifold and remove the 4 screws that secure the manifold assembly to the burner box and set aside.
4. Note the location of the green/yellow wire ground wire for re-assembly later.
5. Slide one-piece burner assembly out of slots on sides of burner box.
6. Remove the flame sensor from the burner assembly.
7. Remove the orifices from the manifold and discard.

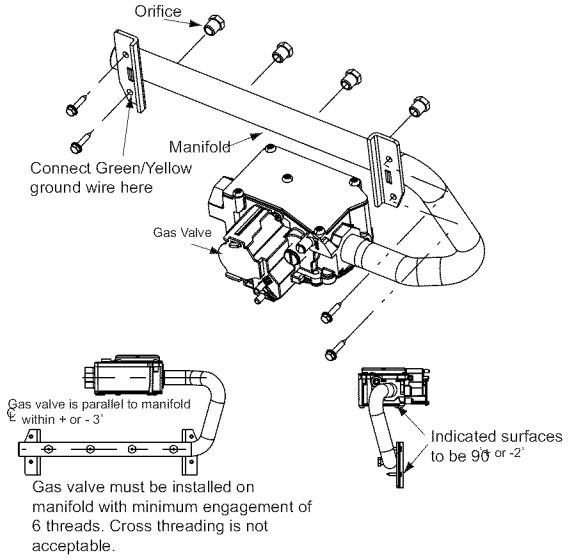

A11407

Fig. 20 - Two-Stage Gas Valve

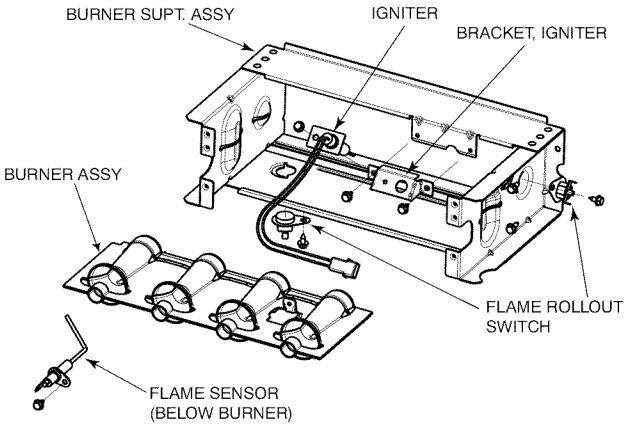

A11403

Fig. 21 - Burner Assembly

ORIFICE SELECTION/DERATE

⚠ CAUTION

UNIT DAMAGE HAZARD

Failure to follow this caution may result in unit damage.

DO NOT re-drill burner orifices. Improper drilling may result in burrs, out-of-round holes, etc. Obtain new orifices if orifice size must be changed. (See Fig. 22.)

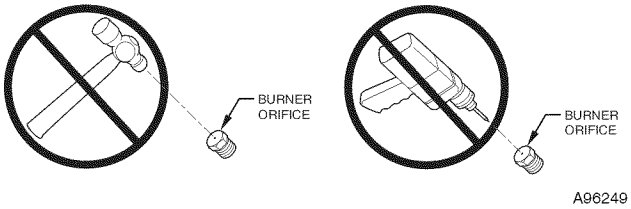

Fig. 22 - Burner Orifice

Refer to conversion kit rating plate 337704-206 to determine main burner orifice size. (See Fig. 23.)

Furnace gas input rate on furnace rating plate is for installations at altitudes up to 2000 ft. (610 M).

In the U.S.A.; the input rating for altitudes above 2000 ft. (610 M) must be reduced by 2 percent for each 1000 ft. (305 M) above sea level.

In Canada, the input rating must be derated by 5 percent for altitudes of 2000 ft. to 4500 ft. (610 M to 1372 M) above sea level.

The Conversion Kit Rating Plate accounts for high altitude derate.

INSTALL ORIFICES

1. Install main burner orifices. Do not use Teflon tape. Finger-tighten orifices at least one full turn to prevent cross-threading, then tighten with wrench.
2. There are enough orifices in each kit for largest furnace. Discard extra orifices.

NOTE: DO NOT reinstall the manifold at this time.

INSTALL MIXER SCREWS

NOTE: There are 2 sets of mixer screws. One set is for Condensing gas furnaces, the other set is for Non-condensing gas furnaces. Use only the parts in the bag marked **"REQUIRED FOR THE CONVERSION OF CONDENSING GAS FURNACES TO PROPANE GAS"**

See Fig. 24 to verify you have the correct set of mixer screws.

1. Locate the dimple on each burner venturi tube. If you cannot locate the dimple, refer to Fig. 25 for location of the mixer screw.
2. Drill a 7/64-in. (2.8 mm) hole (supplied in kit) in each dimple.
3. Install a mixer screw in each drilled hole drilling as straight as possible. The screw head should be flush with the top of the burner venturi.

CONVERSION KIT RATING PLATE - CARRIER CORPORATION

THIS APPLIANCE HAS BEEN CONVERTED TO USE PROPANE GAS FOR FUEL. REFER TO KIT INSTRUCTIONS FOR CONVERSION PROCEDURES. USE PARTS SUPPLIED BY CARRIER CORPORATION AND INSTALLED BY QUALIFIED PERSONNEL. SEE EXISTING RATING PLATE FOR APPLIANCE MODEL NO. AND INPUT RATING.

NOTE: Furnace gas input rate on rating plate is for installations up to 2000 ft. (610m) above sea level. In U.S.A. the input rating for altitudes above 2000 ft. (610m) must be derated by 2% for each 1000 ft. (305m) above sea level. In Canada the input rating must be derated by 5% for altitudes of 2000 ft. (610m) to 4500 ft. (1372m) above sea level.

KIT NO.: KGANP5201VSP (SUPERSEDES: NONE) FUEL USED: PROPANE GAS INLET PRESSURE (min - max): 11.0 - 13.6 in. wc

APPLIANCE MODELS		ALTITUDE OF INSTALLATION (FT. ABOVE SEA LEVEL) U.S.A. *								
		0 to 2000	2001 * to 3000	3001 to 4000	4001 to 5000	5001 to 6000	6001 to 7000	7001 to 8000	8001 to 9000	9001 to 10000
59TN6A 986TA PG96VAT	Orifice No.	1.25mm	1.25mm	1.25mm	1.25mm	1.25mm	1.25mm	1.25mm	1.25mm	1.25mm
		Manifold Pressure								
	HIGH	11.0	11.0	11.0	11.0	11.0	11.0	11.0	11.0	11.0
	LOW	5.8	5.5	5.5	5.5	5.4	5.4	5.4	5.3	5.3

* For Canadian Installations from 2000 to 4500 ft. (610m to 1373m) use U.S.A. column 2001 to 3000 ft. (611m to 914m). 337704-206 REV. D

A11635

Fig. 23 - Conversion Kit Rating Plate

337932-701

PART #	CONTAINS: DESCRIPTION	QTY
328456-402	BIT, DRILL	1
FAJ5812B	SCREW	7

REQUIRED FOR CONVERSION OF CONDENSING GAS FURNACE TO PROPANE GAS.

A11294

Fig. 24 - Gas Conversion Kit

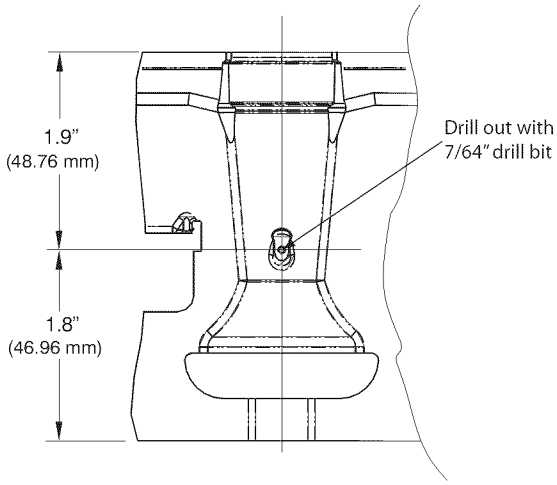

A11460

Fig. 25 - Mixer Screw Location

REINSTALL BURNER ASSEMBLY

To reinstall burner assembly:

1. Attach flame sensor to burner assembly.
2. Insert one-piece burner in slot on sides of burner box and slide burner back in place.
3. Reattach HSI wires to HSI.
4. Verify igniter to burner alignment. See Fig. 26 and 27.

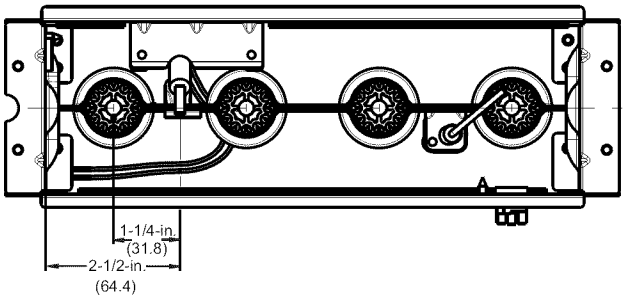

Fig. 26 - Igniter Position - Top View

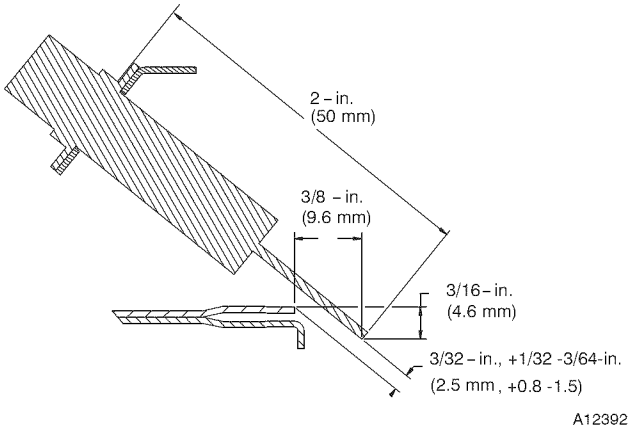

Fig. 27 - Igniter Position - Side View

CONVERT GAS VALVE

⚠ CAUTION

UNIT DAMAGE HAZARD

Failure to follow this caution may result in unit damage

The G or J gas valve must be converted and pre-adjusted before operating on propane gas. The E valves must be pre-adjusted before operating on propane gas. If left this way, sooting and corrosion will occur leading to early heat exchanger failure.

⚠ WARNING

FIRE, EXPLOSION, ELECTRICAL SHOCK HAZARD

Failure to follow this warning could result in personal injury, death or property damage.

Gas supply MUST be shut off before disconnecting electrical power and proceeding with conversion.

⚠ WARNING

ELECTRICAL SHOCK, FIRE OR EXPLOSION HAZARD

Failure to follow this warning could result in personal injury, death or property damage.

Before installing, modifying, or servicing system, main electrical disconnect switch must be in the OFF position and install a lockout tag. There may be more than one disconnect switch. Lock out and tag switch with a suitable warning label. Verify proper operation after servicing.

1. Refer to Fig. 28.
2. Be sure gas and electrical supplies to furnace are off.
3. Remove caps that conceal adjustment screws for high-heat and low-heat stage gas valve regulators. (See Fig. 28.)
4. Remove the high-heat and low-heat regulator adjustment screws.
5. Remove the high-heat and low-heat gas regulator springs (silver).
6. Install the high-heat and low-heat propane gas regulator springs (white).
7. Install the high-heat and low-heat regulator adjustment screws.
8. Turn high-heat stage adjusting screw clockwise (in) 13.5 full turns. This will increase the manifold pressure closer to the propane high-heat set point. (See Fig. 28.)
9. Turn low-heat stage adjusting screw clockwise (in) 9.5 full turns. This will increase the manifold pressure closer to the propane low-heat set point. (See Fig. 28.)
10. Do not install regulator seal caps at this time.

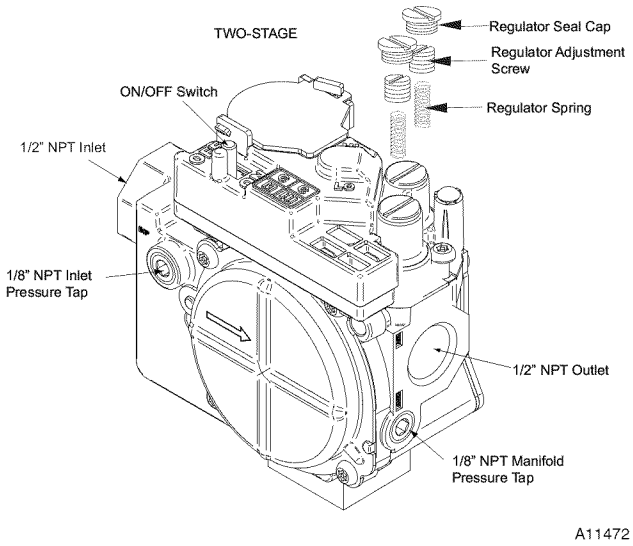

Fig. 28 - Two-Stage Gas valve

INSTALL LOW GAS PRESSURE SWITCH

NOTE: Install the Low Gas Pressure Switch before installing the manifold on the burner assembly.

There are 2 ways to mount the Low Gas Pressure Switch.

All 14 3/16-in. (360 mm) Casings or Vent Passes Between Inducer Assembly and Burner Assembly

(If the vent pipe passes between the inducer and burner assembly, or the furnace is a 14 3/16-in. (360 mm) wide casing, install the switch as follows (See Fig 29.):

1. Remove the 1/8-in. NPT pipe plug from the gas valve inlet pressure tap.

NOTE: Use pipe dope approved for use with Propane Gas.

NOTE: Tighten all fittings and the Low Gas Pressure Switch with a small wrench. Do not over-tighten, check for gas leaks after gas supply has been turned on.

2. Apply pipe dope sparingly to the male threads of the 1/8-in. black iron street elbow. Install the street elbow into the gas valve inlet pressure tap. Point the open end of the street elbow toward you.
3. Apply pipe dope sparingly to the male threads of the 1/8-in. brass street tee. Install the male end of the street tee as shown in Fig 29. One opening on the street tee should face you. The other opening should be parallel with the inlet of the gas valve.
4. Apply pipe dope sparingly to the male threads of the 1/8-in. brass hex nipple. Install the hex nipple into the open end of the brass street tee. See Fig 29. The hex nipple should be parallel with the boss on the gas valve.
5. Install the open end of the brass street elbow on the end of the hex nipple. Tighten the street elbow so the male threads of the elbow point away from you.
6. Apply pipe dope sparingly to the male threads of the 1/8-in. brass street elbow. Install the Low Gas Pressure Switch on the male threads of the street elbow. Tighten switch at hex fitting at base of switch. Do not use switch body to tighten switch. Do not over-tighten switch.
7. The remaining opening on the brass street tee is the new gas valve inlet pressure tap. Install manometer fitting to the open end of the brass street tee. Or if installation is to be completed later, apply pipe dope to inlet pressure plug from gas valve and install in open end of brass street tee.
8. Check all fittings for leaks after gas supply has been turned on.

Casings Wider Than 14 3/16-in. (360 mm) / Vent Does Not Pass Between Inducer and Burner Assembly

1. If the vent pipe does not pass between the inducer and burner assembly, or the furnace is wider than a 14 3/16-in. (360 mm) wide casing, install the switch as follows (See Fig 30.):
2. Remove the 1/8-in. NPT pipe plug from the gas valve inlet pressure tap.

NOTE: Use pipe dope approved for use with Propane Gas.

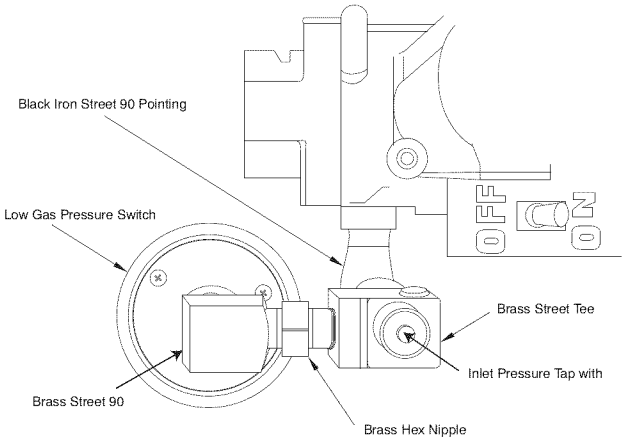

Fig. 29 - LGPS for 14-3/16 Casing or When Vent Passes Between Inducer and Burner Assembly

For larger casing when Vent Pipe does not pass across casing. All Sizes switch contacts must point toward the Cell Panel. Black Iron Street 90 can be used at Valve Inlet instead of Brass Street 90.

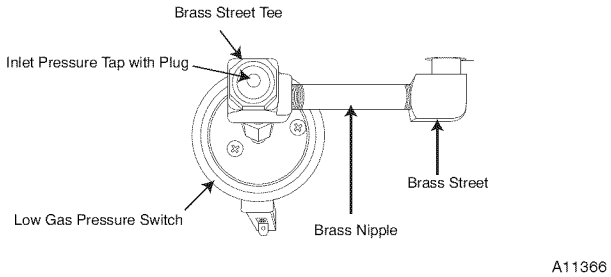

Fig. 30 - LGPS for Casing Wider Than 14-3/16 (360 mm) and Vent Does Not Pass Between Inducer and Burner Assembly

INSTALL LOW GAS PRESSURE SWITCH WIRES

1. Locate the orange wire in the kit with an insulated straight female spade terminal and an insulated straight male terminal on the other end.
2. Connect the female terminal to a terminal on the Low Gas Pressure Switch.
3. Locate the orange wire in kit with an insulated straight female spade terminal and an insulated female flag terminal on the other end.
4. Connect both straight female terminals of the orange wires to the terminals on the Low Gas Pressure Switch.

INSTALL MANIFOLD

1. Align the orifices in the manifold assembly with the support rings on the end of the burner.
2. Insert the orifices in the support rings of the burners. Manifold mounting tabs should fit flush against the burner box.

NOTE: If manifold does not fit flush against the burner box, the burners are not fully seated forward. Remove the manifold and check burner positioning in the burner box assembly.

3. Attach the green/yellow wire and ground terminal to one of the manifold mounting screws.
4. Install the remaining manifold mounting screws.
5. Connect the wires to the flame sensor and hot surface igniter.
6. Connect the connector harness to gas valve.

NOTE: Use only propane-resistant pipe dope. Do not use Teflon tape.

7. Insert the gas pipe through the grommet in the casing. Apply a thin layer of pipe dope to the threads of the pipe and thread the pipe into the gas valve.

NOTE: Use a back-up wrench on the gas valve to prevent the valve from rotating on the manifold or damaging the mounting to the burner box.

8. With a back-up wrench on the inlet boss of the gas valve, finish tightening the gas pipe to the gas valve.
9. Turn gas on at electric switch on gas valve.

MODIFY PRESSURE SWITCH WIRING

⚠ CAUTION

UNIT OPERATION HAZARD

Failure to follow this caution may result in unit damage or improper operation.

Label all wires prior to disconnection when servicing controls.

⚠ PRUDENCE

D'EQUIPEMENT D'OPERATION

Toute erreur de câblage peut être une source de danger et de panne.
Lors des opérations d'entretien des commandes, étiqueter tous les fils avant de les déconnecter.

1. Disconnect orange wire from low-heat pressure switch LPS on inducer housing.
2. Connect the orange wire from the Low Heat Pressure Switch to the orange wire with the insulated male spade terminal.
3. Connect the orange wire from the Low Gas Pressure Switch to the terminal on the Low Heat Pressure Switch.
4. Route orange wires along wire harness. If possible, secure with wire tie provided in kit.

CHECK INLET GAS PRESSURE

⚠ CAUTION

UNIT DAMAGE HAZARD

Failure to follow this caution may result in unit damage.

DO NOT operate furnace more than one minute to check inlet gas pressure, as conversion is not complete at this time.

NOTE: This kit is to be used only when inlet gas pressure is between 11.0-in. W.C. and 13.6-in. W.C.

1. Verify manometer is connected to inlet pressure tap on gas valve.
2. Turn on furnace power supply.
3. Turn gas supply manual shutoff valve to ON position.
4. Turn furnace gas valve switch to ON position.
5. Turn Setup Switch SW1-2 on furnace control ON (see Fig. 31).

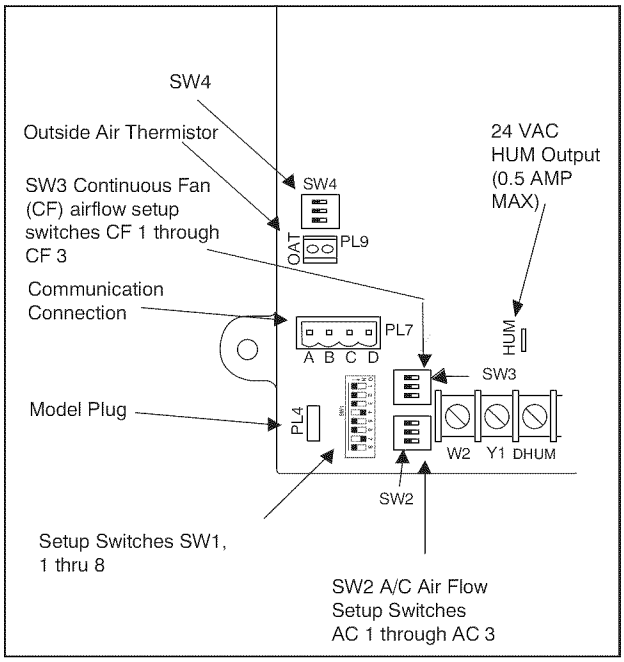

A11471

Fig. 31 - Furnace Control

6. Jumper R-W/W1 and R-W2 thermostat connections on control.
7. When main burners ignite, confirm inlet gas pressure is between 11.0-in. W.C. and 13.6-in. W.C.
8. Remove jumper across R-W/W1 and R-W2 thermostat connections to terminate call for heat.
9. Turn furnace gas valve switch to OFF position.
10. Turn gas supply manual shutoff valve to OFF position.
11. Turn off furnace power supply.
12. Remove manometer.
13. Apply pipe dope sparingly to end of inlet gas pipe plug and install into unused end of 1/8 in. tee. Use a small back-up wrench on tee when tightening gas inlet pipe plug. (See Fig. 13.)

CHECK FURNACE AND MAKE ADJUSTMENTS

⚠ WARNING

FIRE AND EXPLOSION HAZARD

Failure to follow this warning could result in personal injury and/or death.

NEVER test for gas leaks with an open flame. Use a commercially available soap solution made specifically for the detection of leaks to check all connections. A fire or explosion may result causing property damage, personal injury or loss of life.

⚠ AVERTISSEMENT

RISQUE D'EXPLOSION ET D'INCENDIE

Le fait de ne pas suivre cet avertissement pourrait entraîner des dommages corporels et / ou la mort.

Ne jamais examiner pour les fuites de gaz avec une flamme vive. Utilisez plutôt un savon fait specifiquement pour la détection des fuites de gaz pour verifier tous les connections. Un incendie ou une explosion peut entrainer des dommages matériels, des blessures ou la mort.

⚠ WARNING

FIRE, EXPLOSION, ELECTRICAL SHOCK HAZARD

Failure to follow this warning could result in personal injury, death or property damage.

Gas supply MUST be shut off before disconnecting electrical power and proceeding with conversion.

⚠ WARNING

ELECTRICAL SHOCK, FIRE OR EXPLOSION HAZARD

Failure to follow this warning could result in personal injury, death or property damage.

Before installing, modifying, or servicing system, main electrical disconnect switch must be in the OFF position and install a lockout tag. There may be more than one disconnect switch. Lock out and tag switch with a suitable warning label. Verify proper operation after servicing.

1. Be sure main gas and electric supplies to furnace are off.
2. Remove 1/8-in. (3 mm) pipe plug from manifold pressure tap on downstream side of gas valve.
3. Attach manometer to manifold pressure tap on gas valve. (see Fig. 28.)
4. Turn gas supply manual shutoff valve to ON position.
5. Turn furnace gas valve switch to ON position.
6. Check all threaded pipe connections for gas leaks.
7. Turn on furnace power supply.

GAS INPUT RATE INFORMATION

The gas input rate for propane is the same as for natural gas. See furnace rating plate on blower door for input rate. The input rate for propane is determined by manifold pressure and orifice size.

The gas valve must be set for Maximum Heat first and then set for Minimum heat on Modulating furnaces. Furnace gas input rate on rating plate is for installations at altitudes up to 2000 ft. (610 M).

In the U.S.A., the input rating for altitudes above 2000 ft. (610M) must be reduced by 2 percent for each 1000 ft. (305 M) above sea level.

In Canada, the input rating must be derated by 5 percent for altitudes of 2000 ft. (610 M) to 4500 ft. (1372 M) above sea level.

The Conversion Kit Rating Plate accounts for high altitude derate.

SET GAS INPUT RATE

1. Verify SW1-2 on furnace control is turned "ON".
2. Jumper R and W/W1 thermostat connections to call for heat.
3. Check manifold orifices for gas leaks when main burners ignite.
4. Adjust gas manifold pressure. Refer to Conversion Kit Rating Plate 337704-206.
5. Remove caps that conceal adjustment screws for gas valve regulators. See Fig. 28.
6. Adjust low-heat manifold pressure for propane gas. See Fig. 28.
7. Turn low-heat adjusting screw counterclockwise (out) to decrease input rate or clockwise (in) to increase input rate.

NOTE: When correct input is obtained, main burner flame should be clear blue, almost transparent (see Fig. 32).

8. Jumper R, W/W1 and W2 on control center thermostat connections. This keeps furnace locked in high-heat operation.
9. Adjust high-heat manifold pressure for propane gas.
10. Turn high-heat adjusting screw counterclockwise (out) to decrease input rate or clockwise (in) to increase input rate.
11. Replace caps that conceal gas valve regulator adjustment screws.

NOTE: When correct input is obtained, main burner flame should be clear blue, almost transparent (see Fig. 32).

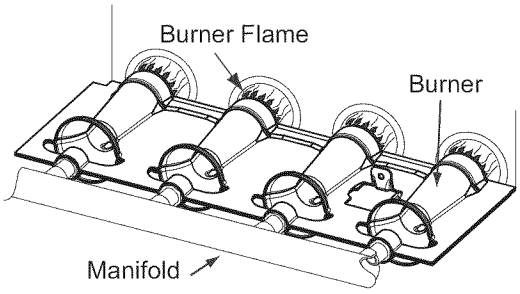

Fig. 32 - Burner Flame

12. Remove jumper across R, W1, and W2 after high-heat adjustment to terminate call for heat.
13. Turn setup switch SW1-2 on furnace control to OFF position.
14. Turn furnace gas valve switch to OFF position.
15. Turn off furnace power supply.
16. Remove manometer and re-install manifold pressure tap plug.
17. Turn furnace gas valve switch to ON position.
18. Turn on furnace power supply.
19. Set room thermostat to call for heat.
20. Check pressure tap plug for gas leaks when main burners ignite.
21. Check for correct burner flame.
22. Observe unit operation through 2 complete heating cycles.
23. See Sequence of Operation in furnace Installation, Start-up, and Operating Instructions.
24. Set room thermostat to desired temperature.
25. After making the required manifold pressure adjustments, check and adjust the furnace temperature rise per the furnace installation instructions.

CHECK LOW GAS PRESSURE SWITCH

The newly installed low gas pressure switch is a safety device used to guard against adverse burner operating characteristics that can result from low gas supply pressure. Switch opens at not less than 6.5 in. W.C. and closes at not greater than 10.2 in. W.C.

This switch also prevents operation when the propane tank level is low which can result in gas with a high concentration of impurities, additives, and residues that have settled to the bottom of the tank. Operation under these conditions can cause harm to the heat exchanger system. This normally open switch closes when gas is supplied to gas valve under normal operating pressure. The closed switch completes control circuit. Should an interruption or reduction in gas supply occur, the gas pressure at switch drops below low gas pressure switch setting, and switch opens. Any interruption in control circuit (in which low gas pressure switch is wired) quickly closes gas valve and stops gas flow to burners. When normal gas pressure is restored, the system must be electrically reset to re-establish normal heating operation.

Before leaving installation, observe unit operation through 2 complete heating cycles. During this time, turn gas supply to gas valve off just long enough to completely extinguish burner flame, then instantly restore full gas supply. To ensure proper low gas pressure switch operation, observe that there is no gas supply to burners until after hot surface igniter begins glowing.

LABEL APPLICATION

1. Fill in Conversion Responsibility Label 337704-205 and apply to Blower Access Door of furnace as shown. Date, name, and address of organization making this conversion are required.
2. Attach Conversion Rating Plate Label 337704-206, see Fig. 23, to Outer Door of furnace.
3. Attach Gas Control Conversion label 337704-202 to gas valve. Do not use 337704-203, which is similar.

CHECKOUT

1. Observe unit operation through 2 complete heating cycles.
2. See Sequence of Operation operation in furnace Installation, Start-Up, and Operating Instructions.
3. Set room thermostat to desired temperature.

SECTION 3

Table 4 – Non-condensing Furnaces

MODEL NUMBERS BEGINNING WITH:	
58CVA	315AAV
58CVX	315JAV
PG8MVA	PG8JVA

INSTALLATION

⚠ WARNING

FIRE, EXPLOSION, ELECTRICAL SHOCK AND CARBON MONOXIDE POISONING HAZARD

Failure to follow instructions could result in personal injury, death or property damage.

Improper installation, adjustment, alteration, service, maintenance, or use can cause carbon monoxide poisoning, explosion, fire, electrical shock, or other conditions, which could result in personal injury or death. Consult your distributor or branch for information or assistance. The qualified installer or agency must use only factory-authorized kits or accessories when servicing this product.

⚠ WARNING

FIRE, EXPLOSION, ELECTRICAL SHOCK, AND CARBON MONOXIDE POISONING HAZARD

Failure to follow this warning could result in personal injury or death.

This conversion kit shall be installed by a qualified service agency in accordance with the manufacturer's instructions and all applicable codes and requirements of the authority having jurisdiction. If the information in these instructions is not followed exactly, a fire, explosion, or production of carbon monoxide could result causing property damage, personal injury, or loss of life. The qualified service agency is responsible for the proper installation of this furnace with this kit. The installation is not proper and complete until the operation of the converted appliance is checked as specified in the manufacturer's instructions supplied with the kit.

⚠ AVERTISSEMENT

LE FEU, L'EXPLOSION, CHOC ELECTRIQUE, ET MONOXYDE DE CARBONE EMPOISONNER

Cette trousse de conversion doit être installée par un servie d'entretien qualifié, selon les instructions du fabricant et selon toutes les exigences et tous les codes pertinents de l'autorité compétente. Assurezvous de bien suivre les instructions dans cette notice pour réduire au minimum le risque d'incendie, d'explosion ou la production de monoxyde de carbone pouvant causer des dommages matériels, de blessure ou la mort. Le service d'entretien qualifié est responsable de l'installation de cette trousse. L'installation n'est pas adéquate ni complète tant que le bon fonctionnement de l'appereil converti n'a pas été vérfié selon les instructions du fabricant fornies avec la trousse.

⚠ WARNING

FIRE, EXPLOSION, ELECTRICAL SHOCK HAZARD

Failure to follow this warning could result in personal injury, death or property damage.

Gas supply MUST be shut off before disconnecting electrical power and proceeding with conversion.

1. Set room thermostat to lowest setting or "OFF".
2. Remove outer doors.
3. Disconnect power at external disconnect, fuse or circuit breaker.
4. Turn off gas at external shut-off or gas meter.
5. Remove outer doors and set aside.
6. Turn electric switch on gas valve to OFF.

MANIFOLD/ORIFICE/BURNER REMOVAL

⚠ CAUTION

UNIT OPERATION HAZARD

Failure to follow this caution may result in unit damage or improper operation.

Label all wires prior to disconnection when servicing controls.

⚠ PRUDENCE

D'EQUIPEMENT D'OPERATION

Toute erreur de câblage peut être une source de danger et de panne.

Lors des opérations d'entretien des commandes, étiqueter tous les fils avant de les déconnecter.

NOTE: Use a back-up wrench on the gas valve to prevent the valve from rotating on the manifold or damaging the mounting to the burner box. See Fig. 33 and 34.

1. Disconnect the gas pipe from gas valve and remove pipe from the furnace casing.
2. Disconnect the connector harness from gas valve. Disconnect wires from Hot Surface Igniter (HSI) and Flame Sensor.
3. Support the manifold and remove the 4 screws that secure the manifold assembly to the burner box and set aside.
4. Note the location of the green/yellow wire ground wire for re-assembly later.
5. Remove wires from both rollout switches.
6. Slide one-piece burner assembly out of slots on sides of burner box.
7. Remove the flame sensor from the burner assembly.
8. Remove the orifices from the manifold and discard.

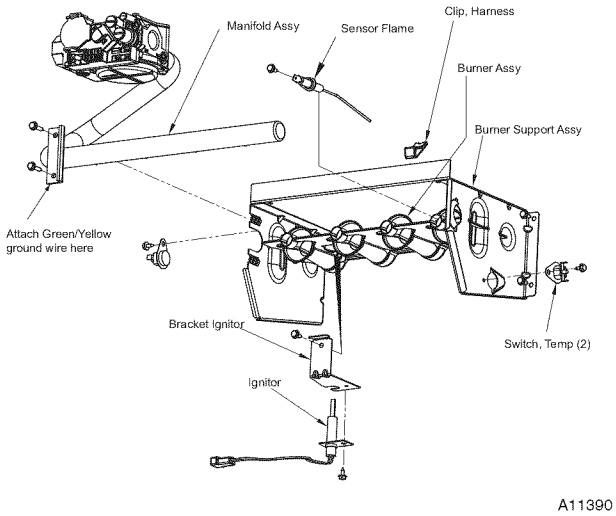

Fig. 33 - 80% Burners

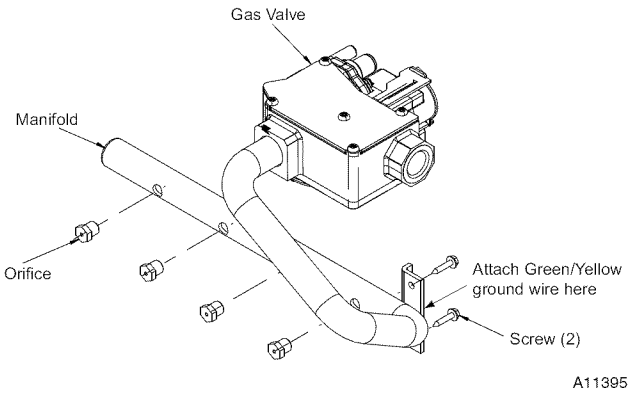

Fig. 34 - 80% Manifold

NOx DEVICE REMOVAL

⚠ CAUTION

UNIT DAMAGE HAZARD

Failure to follow this caution may result in unit damage.

Furnace MUST have low NOx devices removed prior to operating furnace on propane gas.

For NOx device removal, follow these additional steps:

1. Remove the screw underneath the heat exchanger inlet that secures the NOx device in the heat exchanger. (See Fig. 35.)

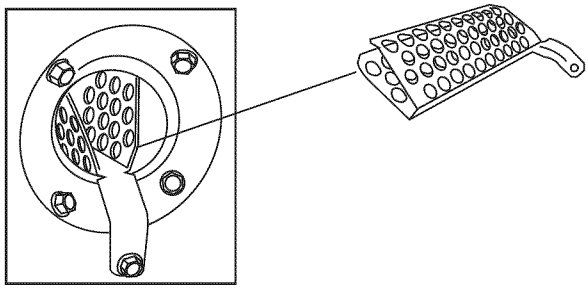

Fig. 35 - NOx Device

2. Use a pair of needle nose pliers to remove the NOx device.
3. Squeeze the sides of the device, if necessary, to remove from the heat exchanger.
4. Re-install screw in hole underneath heat exchanger inlet.

NOTE: It is very IMPORTANT to reinstall the NOx bracket mounting screw.

5. Repeat steps for each heat exchanger.

ORIFICE SELECTION/DERATE

⚠ CAUTION

UNIT DAMAGE HAZARD

Failure to follow this caution may result in unit damage.

DO NOT re-drill burner orifices. Improper drilling may result in burrs, out-of-round holes, etc. Obtain new orifices if orifice size must be changed. (Fig. 36.)

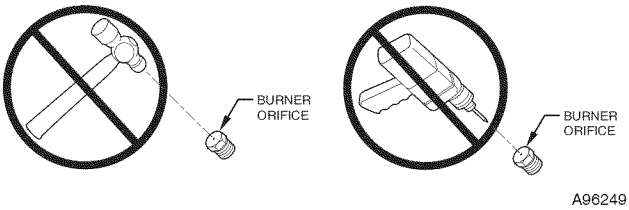

Fig. 36 - Burner Orifice

Refer to conversion kit rating plate 337704-204 to determine main burner orifice size. (See Fig. 37.)

Furnace gas input rate on furnace rating plate is for installations at altitudes up to 2000 ft.

In the U.S.A.; the input rating for altitudes above 2000 ft. must be reduced by 2 percent for each 1000 ft. above sea level.

In Canada, the input rating must be derated by 5 percent for altitudes of 2000 ft. to 4500 ft. above sea level.

The Conversion Kit Rating Plate accounts for high altitude derate.

Install main burner orifices. Do not use Teflon tape. Finger-tighten orifices at least one full turn to prevent cross-threading, then tighten with wrench. There are enough orifices in each kit for largest furnace. Discard extra orifices.

INSTALL ORIFICES

Install main burner orifices. Do not use Teflon tape. Finger-tighten orifices at least one full turn to prevent cross-threading, then tighten with wrench. There are enough orifices in each kit for largest furnace. Discard extra orifices.

NOTE: DO NOT reinstall the manifold at this time.

INSTALL MIXER SCREWS

NOTE: There are 2 sets of mixer screws. One set is for Condensing gas furnaces, the other set is for Non-condensing gas furnaces. Use only the parts in the bag marked **"REQUIRED FOR THE CONVERSION OF NON-CONDENSING GAS FURNACES TO PROPANE GAS"**

See Fig. 38 to verify you have the correct set of mixer screws.

1. Locate the dimple on each burner venturi tube. If you cannot locate the dimple, refer to Fig. 39 for location of the mixer screw.
2. Drill a 7/64-in. (2.8 mm) hole (supplied in kit) in each dimple.
3. Install a mixer screw in each drilled hole drilling as straight as possible. The screw head should be flush with the top of the burner venturi.

CONVERSION KIT RATING PLATE - CARRIER CORPORATION

THIS APPLIANCE HAS BEEN CONVERTED TO USE PROPANE GAS FOR FUEL. REFER TO KIT INSTRUCTIONS FOR CONVERSION PROCEDURES. USE PARTS SUPPLIED BY CARRIER CORPORATION AND INSTALLED BY QUALIFIED PERSONNEL. SEE EXISTING RATING PLATE FOR APPLIANCE MODEL NO. AND INPUT RATING.

NOTE: Furnace gas input rate on rating plate is for installations up to 2000 ft. (610m) above sea level. In U.S.A. the input rating for altitudes above 2000 ft. (610m) must be derated by 4% for each 1000 ft. (305m) above sea level. In Canada the input rating must be derated by 10% for altitudes of 2000 ft. (610m) to 4500 ft. (1372m) above sea level.

KIT NO.: KGANP5201VSP FUEL USED: PROPANE GAS INLET PRESSURE (min - max): 11.0 - 13.6 in. wc

(SUPERSEDES: KGANP4601ALL, KGANP4101ALL, KGANP4001ALL, KGANP3001ALL, KGANP2901ALL)

APPLIANCE MODELS		ALTITUDE OF INSTALLATION (FT. ABOVE SEA LEVEL) U.S.A. *								
		0 to 2000	2001 * to 3000	3001 to 4000	4001 to 5000	5001 to 6000	6001 to 7000	7001 to 8000	8001 to 9000	9001 to 10000
58CVA, 58CVX 315AAV, 315JAV, PG8JVA, PG8MVA	Orifice No.	55	1.30mm	1.30mm	1.25mm	1.25mm	1.25mm	56	56	56
		Manifold Pressure								
	HIGH	11.0	11.0	10.5	11.0	11.0	10.5	11.0	11.0	10.5
	LOW	5.8	5.3	5.0	5.5	5.2	4.9	5.7	5.2	4.8

* For Canadian Installations from 2000 to 4500 ft. (610m to 1373m) use U.S.A. column 2001 to 3000 ft. (611m to 914m).

337704-204 REV. D

A11636

Fig. 37 - Conversion Kit Rating Plate

337932-702

PART #	CONTAINS: DESCRIPTION	QTY
328456-401	BIT, DRILL	1
327593-401	SCREW	7

REQUIRED FOR CONVERSION OF NON CONDENSING GAS FURNACE TO PROPANE GAS.

A11397

Fig. 38 - Gas Conversion Kit

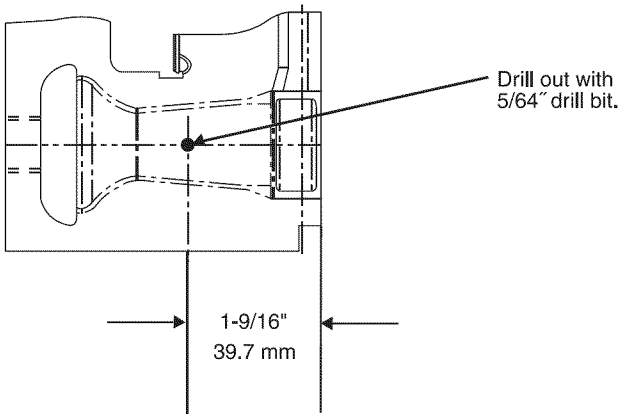

A06432

Fig. 39 - Mixer Screw Location

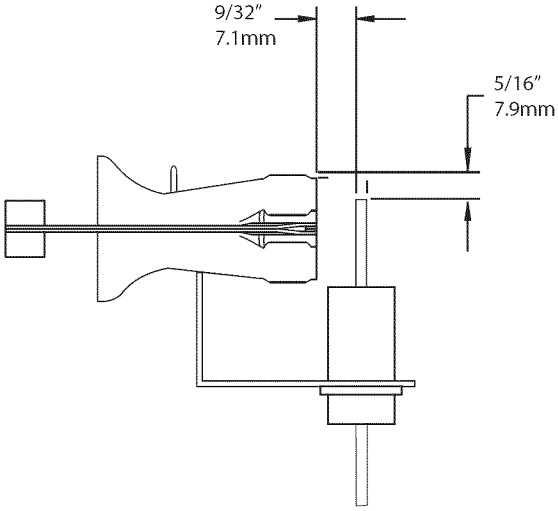

A05025

Fig. 40 - Igniter Position - Side View

REINSTALL BURNER ASSEMBLY

To reinstall burner assembly:

1. Attach flame sensor to burner assembly.
2. Install HSI and bracket to burner assembly.
3. Insert one-piece burner in slot on sides of burner box and slide burner back in place.
4. Reattach HSI wires to HSI.
5. Verify igniter to burner alignment.
6. For Silicon Nitride igniters, see Fig. 40 and 41.
7. For Silicon Carbide igniters, see Fig. 42.
8. Re-attach Flame sensor wire to Flame Sensor.

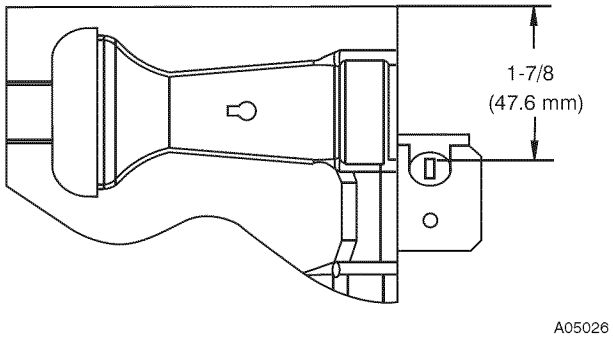

Fig. 41 - Igniter Position - Top View

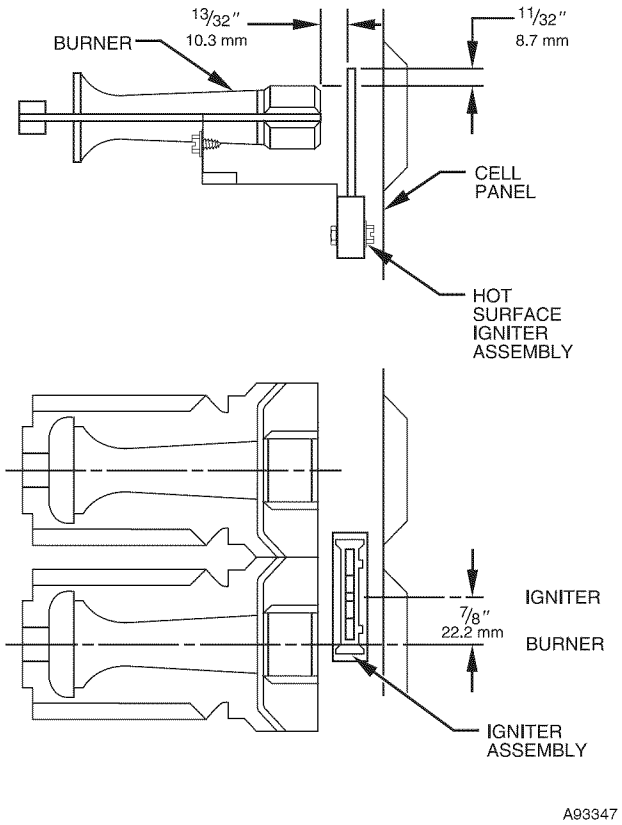

Fig. 42 - Silicon Carbide Igniters

CONVERT GAS VALVE

⚠ CAUTION

UNIT DAMAGE HAZARD

Failure to follow this caution may result in unit damage

The G or J gas valve must be converted and pre-adjusted before operating on propane gas. The E valves must be pre-adjusted before operating on propane gas. If left this way, sooting and corrosion will occur leading to early heat exchanger failure.

⚠ WARNING

FIRE, EXPLOSION, ELECTRICAL SHOCK HAZARD

Failure to follow this warning could result in personal injury, death or property damage.

Gas supply MUST be shut off before disconnecting electrical power and proceeding with conversion.

⚠ WARNING

ELECTRICAL SHOCK, FIRE OR EXPLOSION HAZARD

Failure to follow this warning could result in personal injury, death or property damage.

Before installing, modifying, or servicing system, main electrical disconnect switch must be in the OFF position and install a lockout tag. There may be more than one disconnect switch. Lock out and tag switch with a suitable warning label. Verify proper operation after servicing.

NOTE: For the 2-stage furnaces with a Series J and Series G gas valve (see Fig. 43), **they MUST have both regulator springs replaced and the gas valve MUST be pre-adjusted.**

For older model 2-stage furnaces with a Series E gas valve (see Fig. 44), they DO NOT need to have the regulator springs replaced in the gas valve, but the regulators in the gas valve must be pre-adjusted for propane applications.

For J and G valves See Fig 28.

1. Be sure main gas and electrical supplies are turned OFF.
2. Remove both regulator seal caps. (See Fig. 28.)
3. Remove both regulator adjustment screws.
4. Remove both natural gas regulator springs (silver).
5. Install propane gas regulator springs (white).
6. Install regulator adjustment screws.
7. Turn low-heat stage adjusting screw clockwise (inwards) 9.5 turns. This will increase the manifold pressure closer to the low-heat set point.
8. Turn high-heat stage adjusting screw clockwise (inwards) 13.5 turns. This will increase the manifold pressure closer to the high-heat set point.
9. Do not install regulator seal caps at this time.

For E valves see Fig 44.

1. Be sure gas and electrical supplies to furnace are off.
2. Remove caps that conceal adjustment screws for high- and low-heat stage gas valve regulators. (See Fig. 44.)
3. Turn low-heat stage adjusting screw (3/32-in. [2 mm] hex Allen screw) clockwise (in) 1 full turn. This will increase the manifold pressure closer to the propane low-heat set point.
4. Turn high-heat stage adjusting screw (3/32-in. [2 mm] hex Allen screw) clockwise (in) 2 full turns. This will increase the manifold pressure closer to the propane high-heat set point.
5. Do not install regulator seal caps at this time.

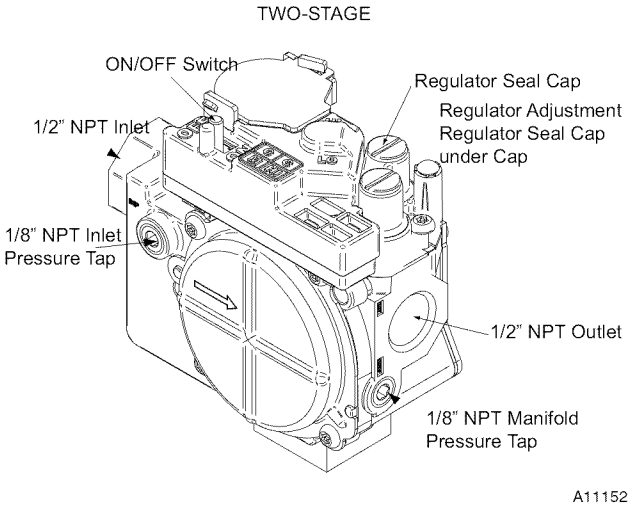

Fig. 43 - 2-Stage J or G Valve

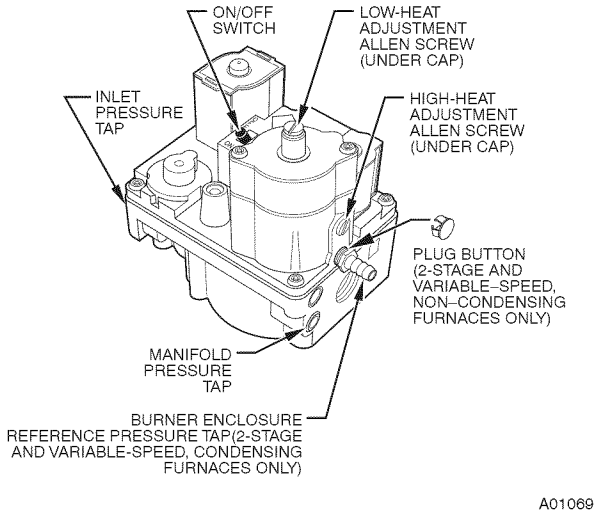

Fig. 44 - 2-Stage E Valve

INSTALL MANIFOLD

1. Align the orifices in the manifold assembly with the support rings on the end of the burner.
2. Insert the orifices in the support rings of the burners. Manifold mounting tabs should fit flush against the burner box.

NOTE: If manifold does not fit flush against the burner box, the burners are not fully seated forward. Remove the manifold and check burner positioning in the burner box assembly.

3. Attach the green/yellow wire and ground terminal to one of the manifold mounting screws.
4. Install the remaining manifold mounting screws.
5. Connect the wires to both rollout switches.
6. Connect the wires to the flame sensor and hot surface igniter.
7. Connect the connector harness to gas valve.

NOTE: Use only propane-resistant pipe dope. Do not use Teflon tape.

8. Insert the gas pipe through the grommet in the casing. Apply a thin layer of pipe dope to the threads of the pipe and thread the pipe into the gas valve.

NOTE: Use a back-up wrench on the gas valve to prevent the valve from rotating on the manifold or damaging the mounting to the burner box.

9. With a back-up wrench on the inlet boss of the gas valve, finish tightening the gas pipe to the gas valve.
10. Turn gas on at electric switch on gas valve.

INSTALL LOW GAS PRESSURE SWITCH

⚠ WARNING

FIRE, EXPLOSION, ELECTRICAL SHOCK HAZARD

Failure to follow this warning could result in personal injury, death or property damage.

Gas supply MUST be shut off before disconnecting electrical power and proceeding with conversion.

⚠ WARNING

ELECTRICAL SHOCK, FIRE OR EXPLOSION HAZARD

Failure to follow this warning could result in personal injury, death or property damage.

Before installing, modifying, or servicing system, main electrical disconnect switch must be in the OFF position and install a lockout tag. There may be more than one disconnect switch. Lock out and tag switch with a suitable warning label. Verify proper operation after servicing.

NOTE: Use propane-gas-resistant pipe dope on all connections to prevent gas leaks. DO NOT use Teflon tape.

1. Be sure main gas and electric supplies to furnace are off.
2. Remove 1/8-in. (3 mm) pipe plug from inlet pressure tap on gas valve. DO NOT DISCARD 1/8-in. (3 mm) PLUG.
3. Apply pipe dope sparingly to one end of 1/8-in. (3 mm) x 2—in. (51 mm) brass nipple (provided in kit) and install the doped end in 1/8-in. (3 mm) tapped opening in gas valve inlet pressure-tap. Tighten fitting with a small wrench.
4. Apply pipe dope sparingly to opposite end of the 1/8-in. (3 mm) x 2—in. (51 mm) brass coupling (provided in kit). Install the female end of the female x female x male tee on the brass coupling.
5. Tighten tee finger tight. Use a small open-end wrench for final tightening. The male end of the tee should be facing you.
6. Apply pipe dope sparingly to male end of brass tee.
7. Install propane low gas pressure switch (provided in kit) on male end of the female x female x male tee.
8. Tighten switch finger tight.
9. Use a small open-end wrench on base of pressure switch for final tightening. The contacts of the LGPS should be pointing toward the inducer motor when complete.
10. The remaining opening on the brass street tee is the new gas valve inlet pressure tap.
11. Install manometer fitting to the open end of the brass street tee. Or if installation is to be completed later, apply pipe dope to inlet pressure plug from gas valve and install in open end of brass street tee.
12. Check all fittings for leaks after gas supply has been turned on.

⚠ WARNING

FIRE AND EXPLOSION HAZARD

Failure to follow this warning could result in personal injury and/or death.

NEVER test for gas leaks with an open flame. Use a commercially available soap solution made specifically for the detection of leaks to check all connections. A fire or explosion may result causing property damage, personal injury or loss of life.

⚠ AVERTISSEMENT

RISQUE D'EXPLOSION ET D'INCENDIE

Le fait de ne pas suivre cet avertissement pourrait entraîner des dommages corporels et / ou la mort.

Ne jamais examiner pour les fuites de gaz avec une flamme vive. Utilisez plutôt un savon fait specifiquement pour la détection des fuites de gaz pour verifier tous les connections. Un incendie ou une explosion peut entrainer des dommages matériels, des blessures ou la mort.

MODIFY PRESSURE SWITCH WIRING

⚠ CAUTION

UNIT OPERATION HAZARD

Failure to follow this caution may result in unit damage or improper operation.

Label all wires prior to disconnection when servicing controls.

⚠ PRUDENCE

D'EQUIPEMENT D'OPERATION

Toute erreur de câblage peut être une source de danger et de panne.

Lors des opérations d'entretien des commandes, étiqueter tous les fils avant de les déconnecter.

1. Locate the orange wire in the kit with an insulated straight female spade terminal and an insulated straight male terminal on the other end.
2. Connect the female terminal to a terminal on the Low Gas Pressure Switch.
3. Locate the orange wire in the kit with an insulated straight female spade terminal and an insulated female flag terminal on the other end.
4. Connect both straight female terminals of the orange wires to the terminals on the Low Gas Pressure Switch.
5. Disconnect orange wire from low-heat pressure switch LPS on inducer housing.
6. Connect the orange wire from the Low Heat Pressure Switch to the orange wire with the insulated male spade terminal.
7. Connect the orange wire from the Low Gas Pressure Switch to the terminal on the Low Heat Pressure Switch.
8. Route orange wires along wire harness. If possible, secure with wire tie provided in kit.

CHECK INLET GAS PRESSURE

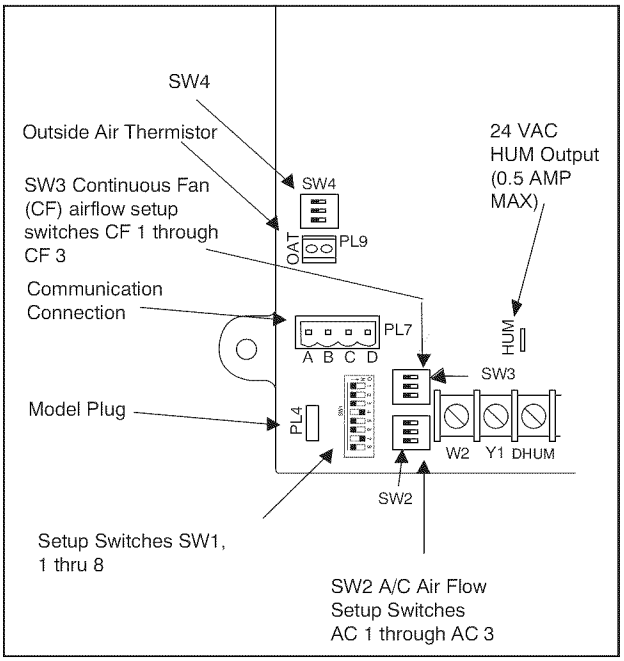

A11471

Fig. 45 - Furnace Control

⚠ CAUTION

UNIT DAMAGE HAZARD

Failure to follow this caution may result in unit damage.

DO NOT operate furnace more than one minute to check inlet gas pressure, as conversion is not complete at this time.

NOTE: This kit is to be used only when inlet gas pressure is between 11.0-in. W.C. and 13.6-in. W.C.

1. Verify manometer is connected to inlet pressure tap on gas valve.
2. Turn on furnace power supply.
3. Turn gas supply manual shutoff valve to ON position.
4. Turn furnace gas valve switch to ON position.
5. Turn Setup Switch SW1-2 on furnace control ON (see Fig. 45).
6. Jumper R-W/W1 and R-W2 thermostat connections on control.
7. When main burners ignite, confirm inlet gas pressure is between 11.0-in. W.C. and 13.6-in. W.C.
8. Remove jumper across R-W/W1 and R-W2 thermostat connections to terminate call for heat.
9. Turn furnace gas valve switch to OFF position.
10. Turn gas supply manual shutoff valve to OFF position.
11. Turn off furnace power supply.
12. Remove manometer.
13. Apply pipe dope sparingly to end of inlet gas pipe plug and install into unused end of 1/8 in. tee. Use a small

back-up wrench on tee when tightening gas inlet pipe plug. (See Fig. 46.)

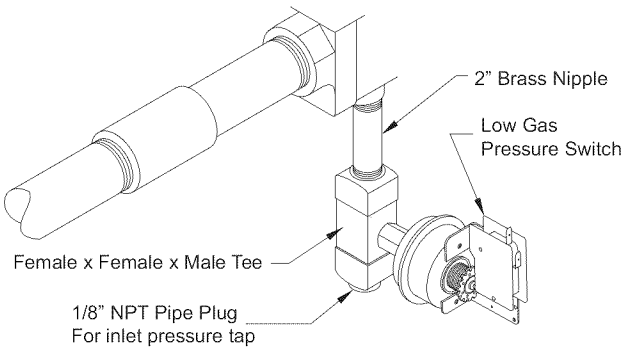

Fig. 46 - 80% Low Gas Pressure Switch

CHECK FURNACE AND MAKE ADJUSTMENTS

⚠ WARNING

FIRE AND EXPLOSION HAZARD

Failure to follow this warning could result in personal injury and/or death.

NEVER test for gas leaks with an open flame. Use a commercially available soap solution made specifically for the detection of leaks to check all connections. A fire or explosion may result causing property damage, personal injury or loss of life.

⚠ AVERTISSEMENT

RISQUE D'EXPLOSION ET D'INCENDIE

Le fait de ne pas suivre cet avertissement pourrait entraîner des dommages corporels et / ou la mort.

Ne jamais examiner pour les fuites de gaz avec une flamme vive. Utilisez plutôt un savon fait specifiquement pour la détection des fuites de gaz pour verifier tous les connections. Un incendie ou une explosion peut entrainer des dommages matériels, des blessures ou la mort.

⚠ WARNING

FIRE, EXPLOSION, ELECTRICAL SHOCK HAZARD

Failure to follow this warning could result in personal injury, death or property damage.

Gas supply MUST be shut off before disconnecting electrical power and proceeding with conversion.

⚠ WARNING

ELECTRICAL SHOCK, FIRE OR EXPLOSION HAZARD

Failure to follow this warning could result in personal injury, death or property damage.

Before installing, modifying, or servicing system, main electrical disconnect switch must be in the OFF position and install a lockout tag. There may be more than one disconnect switch. Lock out and tag switch with a suitable warning label. Verify proper operation after servicing.

1. Be sure main gas and electric supplies to furnace are off.
2. Remove 1/8-in. (3 mm) pipe plug from manifold pressure tap on downstream side of gas valve.
3. Attach manometer to manifold pressure tap on gas valve.
4. Turn gas supply manual shutoff valve to ON position.
5. Turn furnace gas valve switch to ON position.
6. Check all threaded pipe connections for gas leaks.
7. Turn on furnace power supply.

GAS INPUT RATE INFORMATION

The gas input rate for propane is the same as for natural gas. See furnace rating plate for input rate. The input rate for propane is determined by manifold pressure and orifice size.

The gas valve must be set for Low Heat first and then set for High Heat on 2-stage and variable-speed furnaces. Furnace gas input rate on rating plate is for installations at altitudes up to 2000 ft. (610 M).

In the U.S.A., the input rating for altitudes above 2000 ft. (610 M) must be reduced by 2 percent for each 1000 ft. (305 M) above sea level.

In Canada, the input rating must be derated by 5 percent for altitudes of 2000 ft. (610 M) to 4500 ft. (1372 M) above sea level.

The Conversion Kit Rating Plate accounts for high altitude derate.

SET GAS INPUT RATE

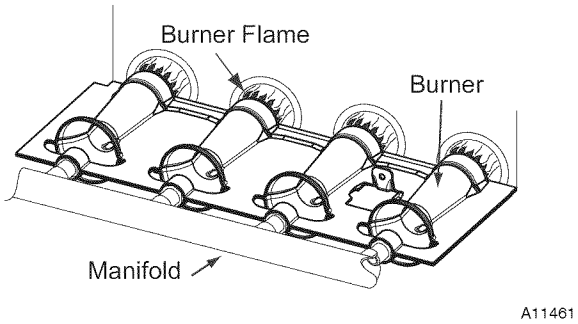

Fig. 47 - Burner Flame

1. Verify SW1-2 on furnace control is turned "ON". See Fig. 45.
2. Jumper R and W/W1 thermostat connections to call for heat.
3. Check manifold orifices for gas leaks when main burners ignite.
4. Adjust gas manifold pressure. (Refer to conversion kit rating plate 337704-204.
5. Remove caps that conceal adjustment screws for gas valve regulators. (See Fig. 43.)

6. Adjust low-heat manifold pressure for propane gas. (See Fig. 43.)
7. Turn low-heat adjusting screw counterclockwise (out) to decrease input rate or clockwise (in) to increase input rate.

NOTE: When correct input is obtained, main burner flame should be clear blue, almost transparent (see Fig. 47).

8. Jumper R, W/W1 and W2 on control center thermostat connections. This keeps furnace locked in high-heat operation.
9. Adjust high-heat manifold pressure for propane gas.
10. Turn high-heat adjusting screw counterclockwise (out) to decrease input rate or clockwise (in) to increase input rate.
11. Replace caps that conceal gas valve regulator adjustment screws.

NOTE: When correct input is obtained, main burner flame should be clear blue, almost transparent. (See Fig. 47).

12. Remove jumper across R, W1, and W2 after high-heat adjustment to terminate call for heat.
13. Turn setup switch SW1-2 on furnace control to OFF position.
14. Turn furnace gas valve switch to OFF position.
15. Turn off furnace power supply.
16. Remove manometer and re-install manifold pressure tap plug.
17. Turn furnace gas valve switch to ON position.
18. Turn on furnace power supply.
19. Set room thermostat to call for heat.
20. Check pressure tap plug for gas leaks when main burners ignite.
21. Check for correct burner flame.
22. Observe unit operation through 2 complete heating cycles.
23. See Sequence of Operation in furnace Installation, Start-Up, and Operating Instructions.
24. Set room thermostat to desired temperature.
25. After making the required manifold pressure adjustments, check and adjust the furnace temperature rise per the furnace installation instructions.

CHECK LOW GAS PRESSURE SWITCH

The newly installed low gas pressure switch is a safety device used to guard against adverse burner operating characteristics that can result from low gas supply pressure. Switch opens at not less than 6.5 in. W.C. and closes at not greater than 10.2 in. W.C.

This switch also prevents operation when the propane tank level is low which can result in gas with a high concentration of impurities, additives, and residues that have settled to the bottom of the tank. Operation under these conditions can cause harm to the heat exchanger system. This normally open switch closes when gas is supplied to gas valve under normal operating pressure. The closed switch completes control circuit. Should an interruption or reduction in gas supply occur, the gas pressure at switch drops below low gas pressure switch setting, and switch opens. Any interruption in control circuit (in which low gas pressure switch is wired) quickly closes gas valve and stops gas flow to burners. When normal gas pressure is restored, the system must be electrically reset to re-establish normal heating operation.

Before leaving installation, observe unit operation through 2 complete heating cycles. During this time, turn gas supply to gas valve off just long enough to completely extinguish burner flame, then instantly restore full gas supply. To ensure proper low gas pressure switch operation, observe that there is no gas supply to burners until after hot surface igniter begins glowing.

LABEL APPLICATION

1. Fill in Conversion Responsibility Label 337704-204 and apply to Blower Access Door of furnace as shown. Date, name, and address of organization making this conversion are required.
2. Attach Conversion Rating Plate Label 337704-204 to outer door of furnace.
3. Apply Gas Control Conversion Label: For 2-stage J and G gas valves, use Gas Control Conversion Label 337780-202. (Do not use 337780-203, which is similar.) For 2-stage E gas valve, use Gas Control Adjustment Label 337780-203. (Do not use 337780-202, which is similar.)
4. Replace control access door, blower access door and outer door of furnace.

CHECKOUT

1. Observe unit operation through 2 complete heating cycles.
2. See Sequence of Operation in furnace Installation, Start-Up, and Operating Instructions.
3. Set room thermostat to desired temperature.

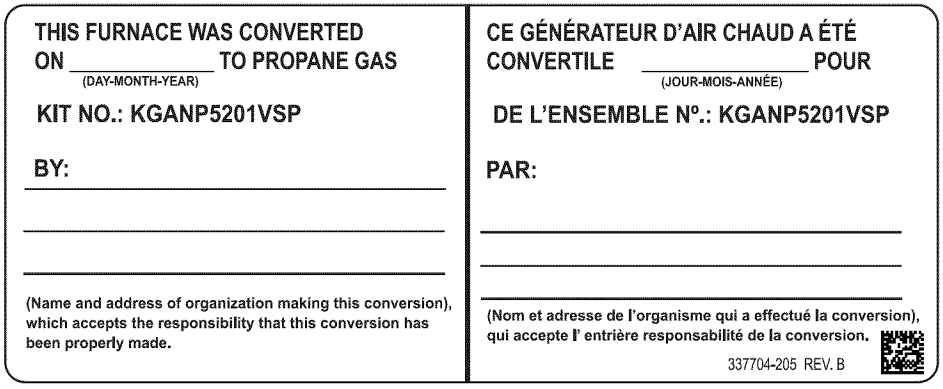

A11296

Fig. 48 - Conversion Rating Plate Label

Copyright 2012 CAC / BDP • 7310 W. Morris St. • Indianapolis, IN 46231

Manufacturer reserves the right to change, at any time, specifications and designs without notice and without obligations.